PRODUCTION TECHNOLOGY

3RD SEMESTER, MECHANICAL ENGG.

KIIT POLYTECHNIC, BHUBANESWAR

METAL FORMING

- Metal forming process is the process in which the metals are deformed to get desired shape and size. Necessary deformation in metal can be achieved by application of large amount of mechanical force or by heating the metal and then applying comparatively less force.
- On the basis of heat applied forming process are classified into two types:

i) **Hot working process:-** If the working temperature is above the recrystallisation temperature then the process is known as hot working process.

ii) **Cold working process:-** If the working temperature is below the recrystallisation temperature then the process is known as cold working process.

Recystallisation temperature:- It is the temperature at which entirely new crystals or grains are formed in the metal and old grain structures are destroyed.

- The metal forming processes are:-

i) Rolling
ii) Extrusion
iii) Forging
iv) Deep drawing etc.

Fundamentals of rolling and extrusion:-

Fundamentals of rolling:-

- Rolling is the process of compressing the metal by passing it between two revolving cylinders called rolls. As the metal is compressed it's cross sectional area is reduced and length is increased.
- Rolling normally a hot working process unless specifically mentioned as cold working.
- The starting material is the molded ingot which is rolled into intermediate shape likes blooms, billets and slabs. These intermediate shapes are rolled further into plates, sheets, bars, structural shapes, I, L, T, or channel section.
- Rolling consist of passing the metal between the two rollers which grip the hot plate and so reduce it in size , and after each pass the rollers are brought closer together and the metal passed through until required reduction in it's section has been attainted.

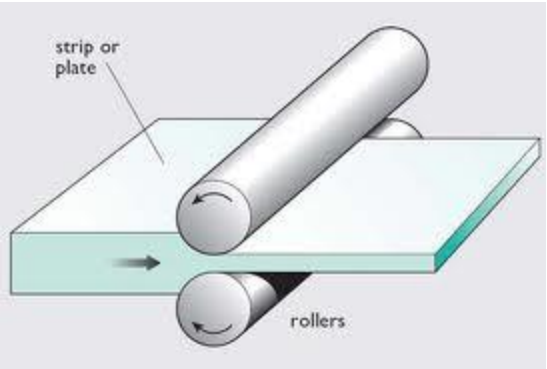

Applications:-

Billets are used for making:-

i. Forgings
ii. Extruded Section
iii. Hot rolled sections, bars, flats, rods, etc., which can be further used to cold roll rods and bars or for cold drawing rods, bars, wires and seamless tubes.

Hot Rolling:-

- The hot rolling process is the most rapid method of converting large section into desired shapes. The forming of bars, plates, sheets, rails and other structural sections are made by hot rolling.
- The operation consists of passing the hot ingot through at least two rolls rotating in opposite direction at the same speed.
- The space between the rolls is adjusted to conform to the desired thickness of the rolled section. The rolls, thus, squeeze the passing ingot to reduce the cross-section and increase its length.
- The ingots are casted in moulds of suitable form and are used in rolling mills as raw material for preparing desired section. The first operation to the ingot is carried out at the blooming mill where it is rolled to blooms. The bloom has a square cross-section with a minimum size of 150 mm×150mm. The blooms are cut up in lengths convenient for the subsequent reducing process into billets. The billet is smaller than a bloom and has a minimum size of 50mm×50mm.
- The successive stages in the reduction of a billet to a round bar. The billet is rotated at 90^0 after each pass.
- When the final product of the rolling mill is to be sheets, plates or strip, the ingots or blooms are rolled to slabs. The slabs have rectangular cross-sections with a minimum width of 250 mm and thickness of 50 mm.

- The materials commonly hot rolled are aluminum, copper, magnesium, their alloys and many grades of steel.

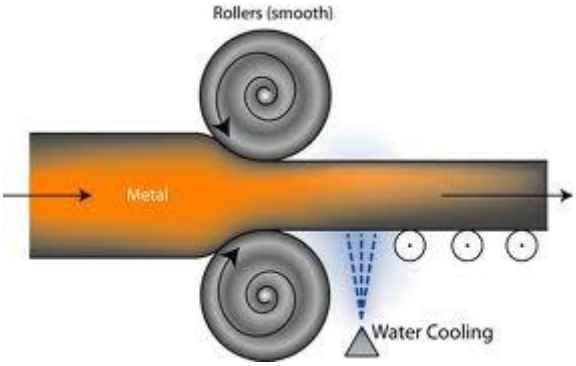

Cold Rolling:-

The rolling of metal below its recrystallisation temperature is called cold rolling:-

1. Cold rolling is generally done to provide a smooth and bright surface finish to previously hot roll steel.
2. Cold rolling is done to improve the hardness and strength of previously hot worked metals.
3. It is also used to finish the hot rolled components to close tolerances.
4. Before cold rolling hot rolled metal surface should be thoroughly clean removing all scale. This is usually done by picking in an acid salutation. Most cold rolling is performed in four high rolling mill and cluster type rolling mill.
5. This is because at lower temperature metals having high strength and backup rolls in 4 high rolling mills and cluster rolling mill provide better support.
6. Cold rolling may cause the metal to become hard and brittle and if it is continued too long cracks may be developed in metal. The metal piece may have to be annealed more cold rolling can be done.

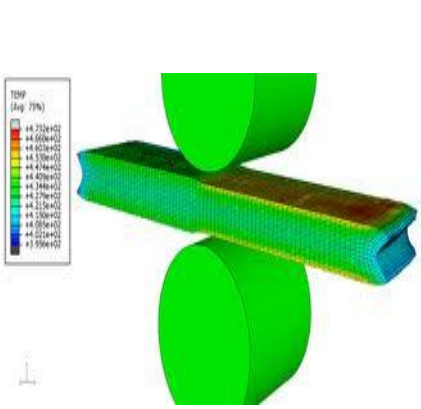

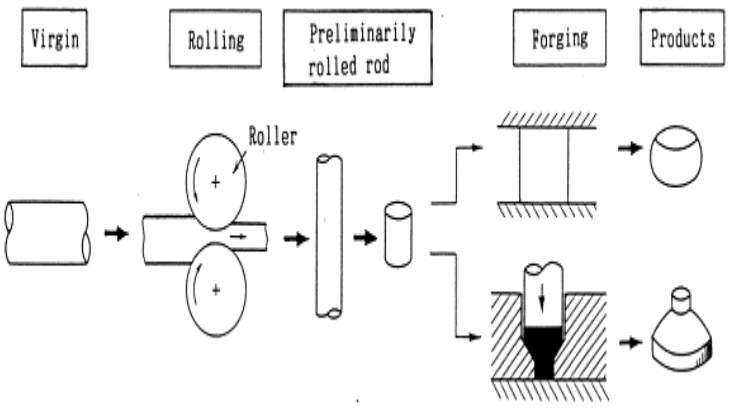

Types Of Rolling Mills:-

Rolling mills may be classified according to the number and arrangement of the rolls:-

a) Two-high rolling mills.
b) Three-high rolling mills.
c) Four-high rolling mills.
d) A tandem mill of three four high stands.
e) Cluster rolling mill.

Hot rolling

Cold rolling

a) Two-high Rolling Mills:-

- A two-high rolling mill may further be classified as a reversing mill and a non-reversing mill.
- A two-high rolling mill has two rolls only.
- In a two high rolling mill the rolls rotate first in one direction and then in the other so that the rolled metal may pass back and forth through the rolls several times. This type is used in blooming and slabbing mills and for roughing working plate, rail, structural and other mills.
- The two non-reversing mills have two rolls which revolve continuously in the same direction. Therefore, smaller and less costly motive power can be used. However, every time, material to be carried back over the top of the mill for again passing it through the rolls. Such an arrangement is used in mills through which the bar passes once and in open-train plate milling.

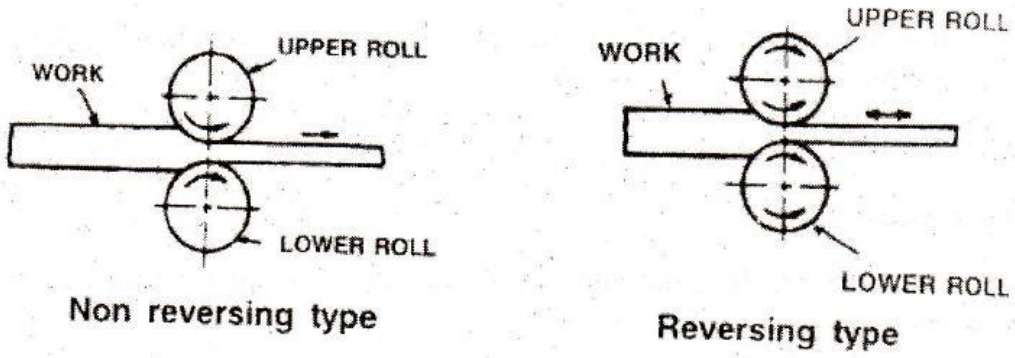

Fig 5.51 Two High Rolling Mill

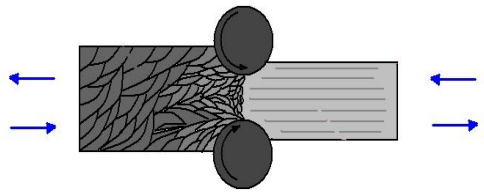

Reversing Mills

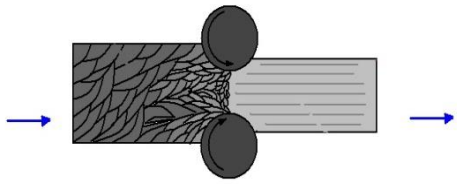

Non Reversing Mills

b) Three High Rolling Mills:-

- It consist of a roll stand with three parallel rolls one above the other.
- Adjacent rolls rotate in opposite directions so that material may be passed between the top and middle rolls in one directions and the bottom and middle rolls in the opposite one.
- In three high rolling mills the work piece is rolled in both the forward and the return passes. First of all the work piece passes through the bottom and the middle rolls and then returning between the middle and top rolls so that thickness is reduced at each pass. Mechanically operated lifting tables are used which moves vertically on either side of the stand, so that the work piece is feed automatically into the roll gap.
- Since the rolls run in one direction only, a much less powerful motor and transmission system is required.
- The rolls of a three-high rolling mill may be either plain or grooved to produce plate or sections respectively.
- Three-high rolling mill may be used as blooming mills or for subsequent rolling operations, such as billet rolling and finish rolling.

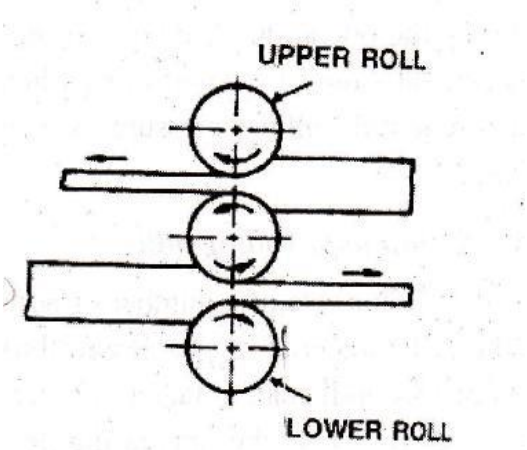

Fig. 5.52 Three High rolling Mill

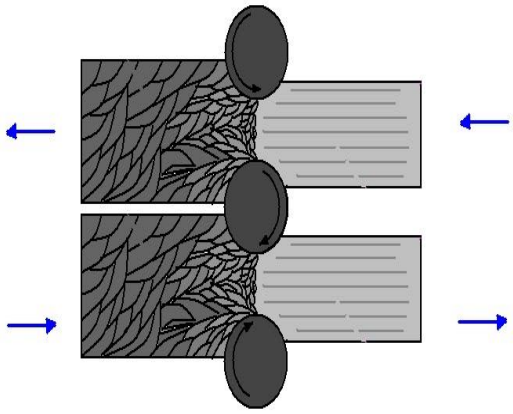

Three High Rolling Mills

c) **Four-high Rolling Mill:-**

- It has a roll stand with four parallel rolls one above the other.
- The top and bottom rolls rotate in positive directions, as do the two middle rolls.
- The two middle rolls are known as work rolls as the work piece is fed between them .
- The two middle rolls are similar in size then the top and bottom rolls which are called back-up rolls because they reinforce the smaller work rolls to minimize roll deflection, which otherwise would cause plates and sheet to be thicker at the center than at the two outer edge .
- The four-high rolling mill is used for the hot rolling of armour and other plate, as well as the cold rolling of plates, sheets and strips.

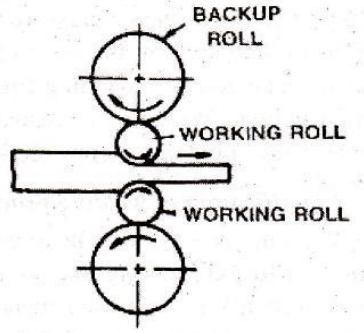

Fig 5.53 Four High Rolling Mill

d) Tandem Rolling Mills:-

- It is a set of two or three stands of rolls set in parallel alignment so that a continuous pass may be made through each one successively without change of direction of the metal or pause in the rolling process.

TANDEM ROLLING OPERATION

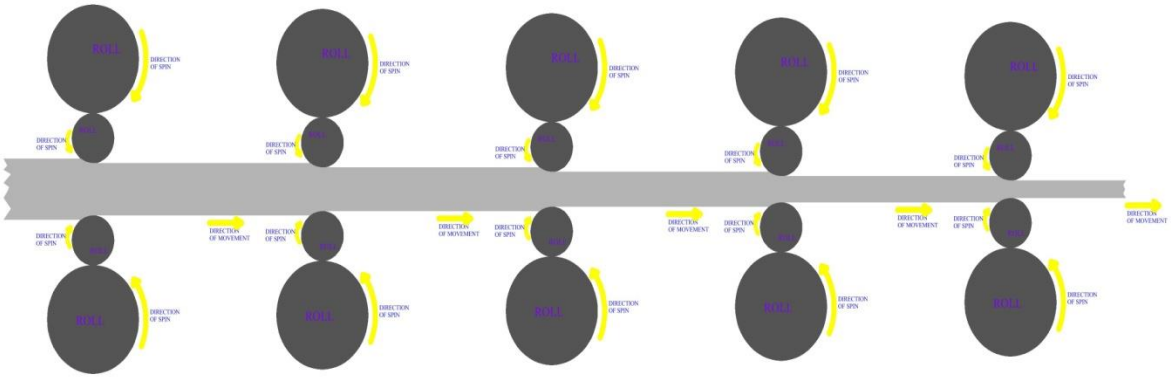

e) <u>Cluster Rolling Mills:-</u>

- It is a special type of four high rolling mill in which each of the two working rolls is backed up by two or more of the larger back-up rolls.
- For rolling hard thin materials, it may be necessary to employ work rolls of very small diameter but of considerable length. In such cases adequate support of the working rolls can be obtained by using a cluster-mill.

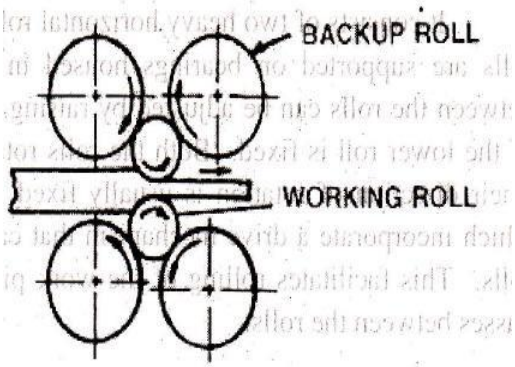

Fig 5.54 Cluster rolling mill

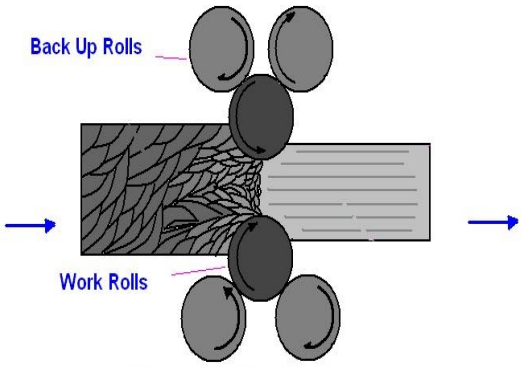

Cluster Rolling Mills

<u>Rolling Of Rounds, Flats And Sections:-</u>

Various common sections rolled are:-

i. Square.
ii. Round.

iii. Flat.
iv. Hexagon.
v. Angle.
vi. Tee.
vii. I-Beam.
viii. Channel.
ix. Rail.

Defects In rolled Products:-

i. Rolling frequently involves non-uniform deformation of the metal and this is most pronounced in the rolling of complex shapes such as rails, beams, channels, etc.
ii. Fins may be formed on the rolled bars if the metal forces itself into the clearance between the rolls. Fins may lead to various defects such as laps, cracks, etc.
iii. Laps may be caused by over filling in the rolling mill passes, which will produce fins. In passes which flow, these fins are pressed back in to the surface without welding, causing laps.
iv. When the metal is hot rolled, it's surface is not smooth and it has scale formed over the same.
v. Cracks may form during cold rolling if the metal becomes too much work-hardened during the process.

Fundamentals of extrusion:-

- Extrusion is a metal working process that produces continuous lengths of uniform, non-uniform, cross-sectional area from a metal billet, solid or hollow, by causing the latter to flow under high pressure through a restricted opening called die which is so shaped as to impart the required form to the product.
- Extrusion is mainly a hot working process, starting generally with cast billets and producing wrought sections and tubes in one stage.
- An extrusion press has three major components:
  i. The container,
  ii. Die,
  iii. Ram.
- A heated cylindrical billet is placed in the container and forced out through a steel die by a ram or plunger.
- The metal takes in cross-section the shape of the die.

- When pressed from the back, the tooth paste comes out of the front small portion of the tooth paste tube; this is an extrusion process.

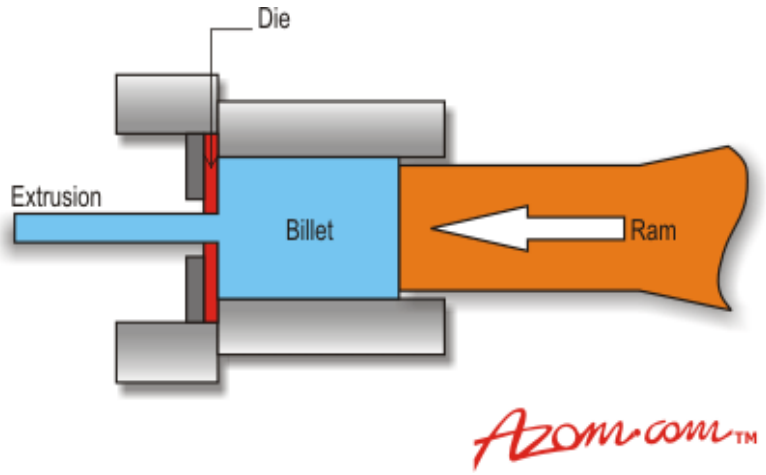

Scope(Applications):-

- Extrusion is an uncomplicated hot metal working manufacturing process that can produce some of the most complex shapes of all the hot metal working manufacturing processes.
- Extrusion process is used to manufacture
  i. Rods,
  ii. Tubes,
  iii. A verity of circular, square, rectangular, hexagonal and other shapes both in the solid or hollow form.
  iv. Channel I, Z, T and other sections can be made.
- Extruded sections find almost infinite uses; some of each are in
  i. Transportation (ships, automobile, railroad and aircraft) industry.
  ii. Construction Industry.(Making Building).
  iii. Oil Industry (As drill pipe and pipelines).
  iv. Military Uses (Armor plate, guns and other weapons).
  v. Chemical and nuclear power industries (Extruded tubing).
- Extrusion is widely applied in non-ferrous field; however it has only a limited application in steel component manufacture.

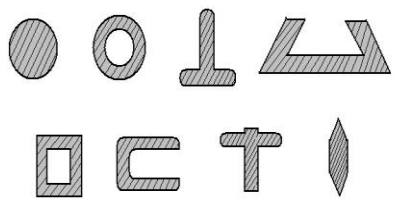

Typical Extruded Parts

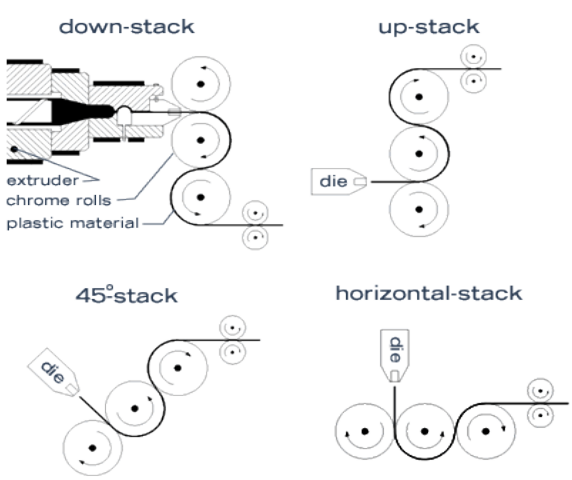

Methods Of Extrusion:-

1. Direct Extrusion:-

- Direct extrusion in which the flow of metal through the die is in the same direction as the moment of ram. Ram is solid.
- A hot billet is placed within the container that has a die at one end.
- A ram forces that hot billet through the die opening, producing the extruded products.
- So that the oxides, etc., that exist on the exterior wall of the billet do not get mixed into the final extrusion as the billet is pushed through the die, direct sleeve extrusion method is used.
- A dummy block which is little smaller than the billet chamber walls is employed for the purpose. As the punch moves forward, the exterior surface of the billet remains stationary, where as the interior metals is forced through the die for making the extruded products.

2. Indirect Extrusion:-

- The ram used is hollow and the die is mounted over the bore of the ram. The metals flow in the opposite direction to the movement of ram.
- In indirect extrusion, the billet remains stationary while the die is pushed into the billet by the hollow ram, through which the extrusion takes place.
- Indirect extrusion does not require as much force as direct extrusion because no force is required to move the hot billet inside the chamber walls.
- The length of the billet in indirect extrusion is limited only by the column strength of the ram, because there is no relative motion between the billet surface and the container wall.

- Many practical limitations restrict the usefulness of indirect extrusion, particularly the fact that the ram must be hollow and the extrusion product must be passed back through the ram.
- Direct extrusion is more common.
- The dummy block may be used in direct extrusion also. The dummy block used in direct extrusion separates the punch from the hot metal; in indirect extrusion the die plays the parts of the dummy block.

3. **Backward Extrusion:-**
   - In direct and indirect extrusion methods the ram is of the same diameter as the bore of the container, whereas in backward extrusion the ram is smaller in diameter than the container and the metal flows up the annulus formed by the ram and the container.
   - Direct extrusion, indirect extrusion and backward extrusion possesses normally use a heated billet of metal for extrusion and hence the extrusion process is known as hot extrusion.
4. **Impact Extrusion:-**
   - Impact extrusion is used for manufacturing collapsible tubes for shaving cream, toothpaste and thin walled cans. The process is limited to soft and ductile materials such as aluminum and it's alloys.
   - The setup consists of die and punch. A slug of metal of suitable thickness is kept on the die. The outside die of tubes is same as that of diameter of hole in die.
   - Punches strikes a single blow causing the metal to flow through the annular shape between the punch and die.
   - The metal is extruded in the direction opposite to punch movement because of impact force. The process is conducted at room temperature.
   - In recent years the process has been developed and now also applied to production of components for air craft, cars and domestic appliances of Aluminum, Copper alloy and steels.

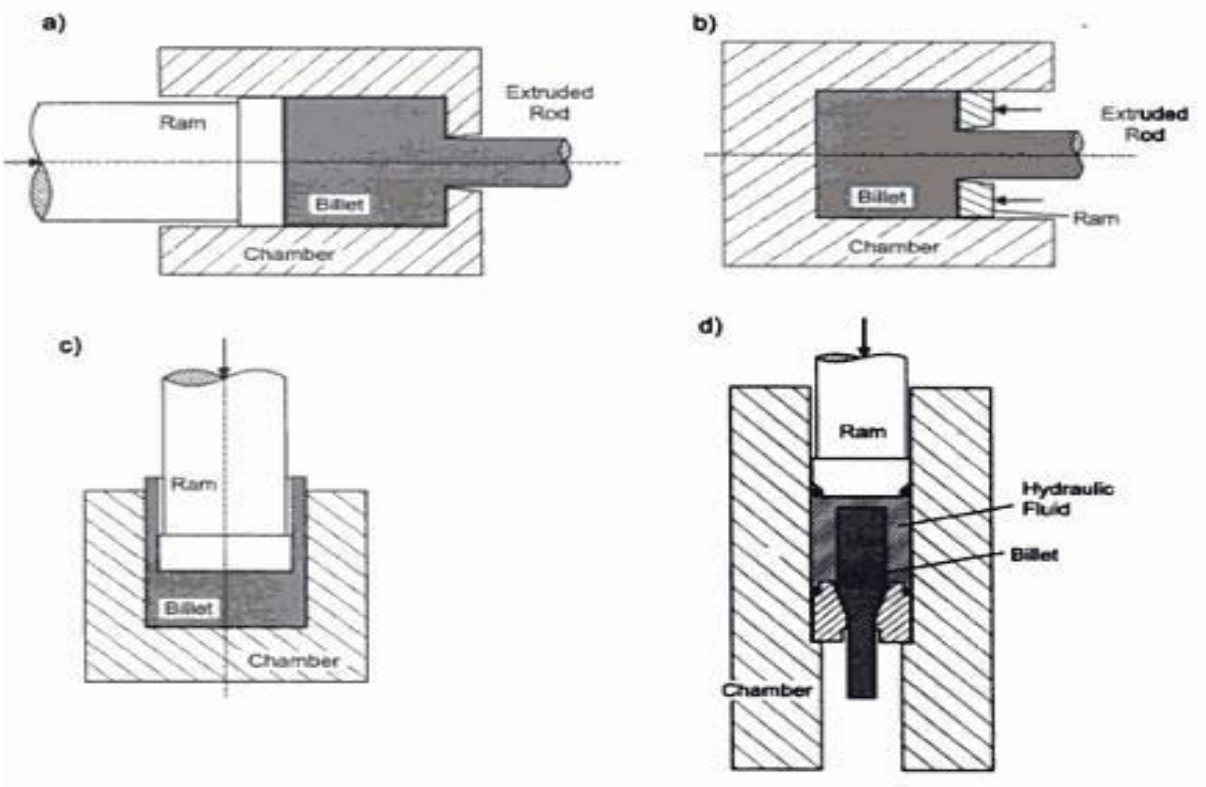

PRESS TOOL

PRESS WORK:-

- Press work is a cold working process generally used in mass production in the form of thin strip of sheet metal.
- In other words it is a chip less manufacturing process by which various components are made from sheet metal. It is also called as cold stamping process.

DIE:-

- A die is that part of press tool which has an opening or cavity to receive the punch. The die is usually the lower member of the press tool.

PUNCH:-

- A punch is that part of the press tool which enters in to the cavity formed in the die section. The punch is usually the upper member of the press tool.

TYPES OF PRESS WORK:-

1. Manually operated press work.
2. Power operated press work.

Classification based on source or power:-

(a) Hand press or ball press / fly press.

(b) Power press / power hammer.

Types of Dies and Operations:-

Classification based on operations performed:-

(**i) <u>Shearing</u>**:-

(a) Piercing

(b) Punching

(c) Perforating

(d) Blanking

(e) Cutting off

(f) Parting

(g) Notching

(h) Slitting

(i) Lancing.

(ii) <u>Bending</u>

(a) Angle bending

(b) Curling

(c) Forming

(d) Plunging

(iii) <u>Drawing</u>

(a) Cupping

(iv<u>) Squeezing</u>

(a) Coining

(b) Embossing

(c) Flattening or plainshing.

CLASSIFICATION OF PRESS WORKING DIES BASED ON CONSTRUCTION:-

1. Simple dies/Single operation dies.
2. Compound dies.
3. Combination dies.
4. Progressive dies.
5. Gang and follow dies.
6. Transfer dies
7. Forming dies.

SIMPLE DIES:-

- Simple dies or single operation dies perform single operation for each stroke of the press.

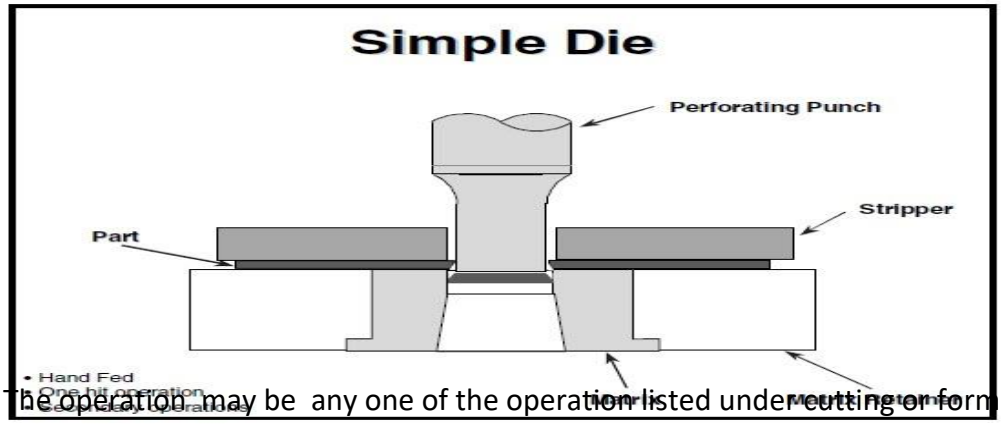

- The operation may be any one of the operation listed under cutting or forming dies
- Single operation dies may be blanking dies, piercing die, shaping dies, bending dies etc.

WORKING:-

- In simple die the shank portion is held in the ram the metal sheet is held in between stripper plate and dies block resting against the stop. So that some amount of sheet stock is feed every time for cutting.
- The stripper plate helps removal of stock from the punch as it moves up after doing the cutting operation.

COMPOUND DIE:-

- These dies two or more operation may be performing in one station such dies are considered as cutting tools. Since only cutting operation are carried out.

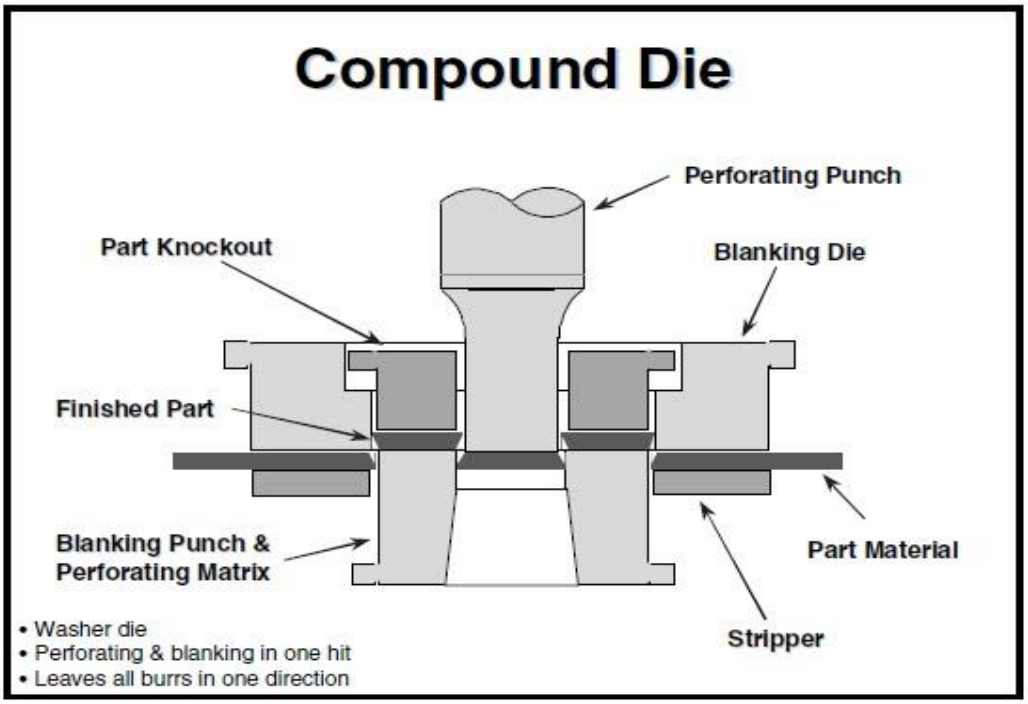

WORKING:-

- The metal sheet is placed between the upper die and lower die both blanking and piercing is carried out during the same stroke of the process.
- blanking operation in the metal sheet is carried out when the upper die descends the blank is cut, at the same time the lower die acting as punch pierces a hole in the centre of the blank.
- The washer is produced by simultaneously blanking and piercing operation.

ADVANTAGES:-

- Compound dies are very economical in mass production as compare to simple die .
- It is used for doing multi operation in a single stroke of the operation.
- very accurate parts are produced by these dies.
- Compound dies makes close tolerances accurate concentric parts as all work is done in a single operation.

DISADVANTAGES:-

- Manufacturing cost is high.
- These dies are complicated in design.
- These dies are required more space to install.

PROGRESSIVE DIES:-

- In a progressive die, two or more operations are performed simultaneously at a single stroke of the press by mounting separate sets of dies and punches at two or

more different station. The metal is progressed from one station to the other till the complete part is obtained.

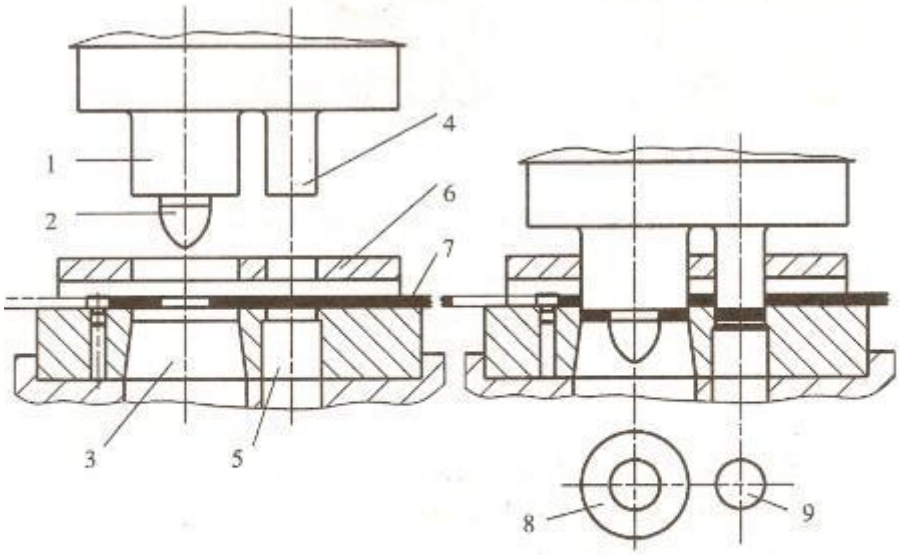

Fig. 1-8 Progressive die for blanking and punching

1-blanking punch 2-locating pin 3-blanking die 4-punching punch
5-punching die 6-stripper 7-blank 8-workpiece 9-waster

WORKING:-

- The sheet meal is feed in to the first die where a hole is pierced by the piercing die set in the first cutting stroke of the ram.
- The plate is then advanced in the next station and the correct spacing is obtained by the stop.
- In the second cutting stroke of the ram, the locating pin enters in to the pierced hole and correctly locates it. While the blanking punch descends and shears the plate to form a washer.
- By the time the blanking operation is performed, the hole for the next washer is also pierced at the first station.
- Thus although two stroke are required to complete a washer, piece of washer is discharged on every stroke of the ram due to the continuity on operation.

ADVANTAGES:-

- It is used for mass production by the continuous feed of the strip from a coil.

DISADVNTAGES:-

•These are the multiple station dies so it requires more working space than compound die.

PUNCHES:-

- A punch is a male portion of complete die. It is usually upper member and is fastened to top bolster. Punches are used for piercing, blanking, embossing, coining, lancing etc.
- Punches are classified into
    - Plain Punch
    - Pedestal punch
    - Bossed punch
    - Flanged punch
    - Perforated punch
    - Quill Punch

Plain Punch: - A cross section of plain punches is rectangular side walls follow the cutting contour, originating from the cutting edge plain punches are astronomical as their easy to make and machine. They can be ground straight through they and mounted with the help of screws and dowels. Plain punches can be regarding short height. If punches proportion are not favourable, that they cannot be assemble by mounting on punch plate or supporting end guiding, the punch in the stripper plate.

Pedestal punch: - The flange is an integral part of the punch. The pedestrian punch used when the punch is too large to be manufacture or too small to accommodate mounting hole and dowels due to long base area these punches are stable in addition. The large base area moves an ideal foundation for the punch as the cutting force get s spread over a large area.

Bossed punch: - The diameter of the boss should be kept as large as possible and boss height should be nearly 0.5 times the boss diameter.

Flanged punch: - These punches are used for low production dies & limited accuracy, so that extended area in flanged punches is provided into for attachment screw.

Perforated punch: - Punches whose cutting space diameter is lower than 25mm are termed as perforated the punches need not be round but the inscribe circle of the punch should have a diameter lower than 25mm.As a rule all the perforator are mounted on a punch plate. The simplest & most common perforator is the step head type Mounted in a punch type by means of step head.

Quill Punch: - For piercing where is small hole less than 6mm it is desirable to provide extra support to the punch shank by mean of a closely fitting quill as shown in the fig. Quill punches are most expensive. If made individually because of the cross fitting reqd. between the punch and quill sizes. There for there are many produce measures standard size.

Different Press Work Operation In Sheet Metal:-

1. **Blanking:-**
   - Blanking is the operation of cutting a shape from a metal strip. The piece detached from the strip is known as blank and is used for further operations. The remaining metal strip is scrap.
   - Blanking is nearly always the first operation and may be the only one necessary, or it may be followed successively by many others.
   - Blanking is often combined with other operations in one tool, all the work being performed at one stroke of the press.
   - A blanking die must have clearance, otherwise the blank would not fall freely, It might remain struck in the die block.
2. **Piercing:-**

   Piercing is a punching operation. However piercing is a distinct hole making process characterized by the lack of scrap from the hole. In piercing, a pointed, bullet-shaped punch is forced through the sheet metal to produce a hole with a rough flange around the hole.
3. **Trimming:-**
   - During any press working operation, in which the part must be held in place by the press, the outer edge of the part, which is the area usually gripped, becomes marked and scored. Trimming is the cutting of this excess metal edge.
   - Trimming dies are similar to the blanking dies and the part is forced through the die by a suitable punch to carry out trimming operation.
   - Trimming may be the last operation in the progressive die to separates the parts from the strips.
   - Trimming may be performed horizontally or vertically, depending upon the configuration of the part.
4. **Punching:-**

   It is also known as piercing. It is a cutting operation by which various shaped holes are cut on sheet metal. Punching is similar to blanking except that in punching the hole is the desired product. The metal cut out is taken as waste metal.
5. **Notching:-**

   This is a cutting operation in which metal pieces are cut from edges of sheet metal.
6. **Perforating:-**

   This is a process by which a no of holes are cut close together in sheet metal.
7. **Lancing:-**

   This is a cutting operation in which a hole is cut partly and then one side is bent down. In this process no metal is removed and there is no waste of metal.
8. **Shaving:-**

The edges of a sheet metal are rough uneven and unsquare. Accurate dimensions are obtained by removing a thin strip along the edges. This operation is known as shaving.

9. **Slitting:-**

   It is a cutting operation in which a no. of fine holes are made.

10. **Bending:-**

    It is a forming operation in which a sheet metal is pressed between two dies and is bent. The sheet metal is fixed in a die table and force is applied to the free end.

11. **Drawing:-**

It is a process of forming a flat work piece into a hollow shape by means of a punch.

ADVANTAGES & DISADVANTAGES OF DIES & PUNCHES:-

ADVANTAGES:-

- Requires minimal space in the press.

- Leaves all burrs in one direction.

- Superior accuracy between holes & trim edges.

- More economical to build than a progressive die.

- Die casting dies retain their accuracy for a very long time.

- High surface finish is obtained& often no further finishing is required.

DISADVANTAGES:-

- The limited space which ends to leave die components this & weak. This contracts the loads shock on punches & matrixes resulting in tooling failures.

- All metals & alloys cannot be cat.

- The cost of M/C &, dies & other equipment used is high.

- Not economical for small quality production.

- Heavy casting cannot be cast.

- Special precautions cannot be cost.

- Special precautions are necessary for evacuation of air from die cavity otherwise cause porosity.

JIGS AND FIXTURE

- Jigs and fixtures are work holding and tool guiding devices which are used for repetitive work.
- The jigs and fixture are the economical means to produce repetitive type of work by incorporating special work holding and tool guiding devices.

JIG:-

- A Jig may be defined as a device which holds and locates a work piece and guides and controls one or more cutting tools.

- The holding of the work & guiding of the holes are such that they are located in two positions relative to each other.

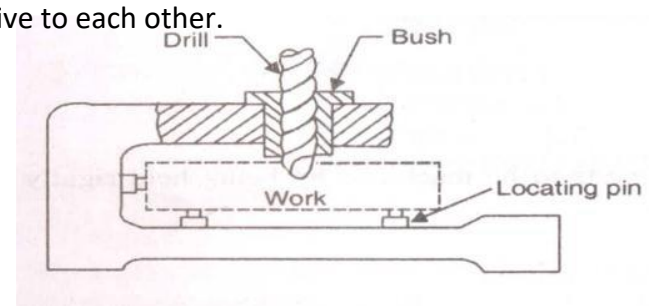

FIXTURE:-

- A fixture may be defined as a device which holds & locates a workpiece during an inspection or for a manufacturing operation.

- The fixture does not guide the tool.

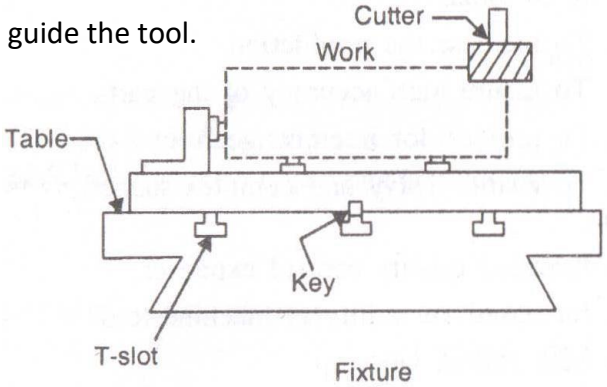

ADVANTAGES OF USING JIG AND FIXTURE

- It eliminates the operation like setting, marking, measuring etc.
- It increases the accuracy because wok piece is located automatically and tool is guided without any manual adjustment.
- It increases the production efficiency.
- It reduces the labour time.
- Skilled labour is not required.
- No need to expand for quality control after production.
- It reduces the overall cost of production.

DIFFERENCE BETWEEN JIG AND FIXTURE:-

JIG:-

- It holds the work piece as well as guides the cutting tool.
- Jig is lighter.
- In case of jig the rigid attachment is unnecessary on machine tool.
- Jig is generally used for tapping and drilling.

FIXTURE:-

- It only holds the work piece.
- Fixture is heavier.
- Fixture is bolted rigidly with machine tool.
- Fixture is used for operation like planning milling, turning.

PRINCIPLE OF LOCATION.

- It established the relationship between work piece jig and fixture.
- It required for the better accuracy on the work piece.
- The design of jig or fixture should be such that it restrict all the possible moment of the work piece, in x, y and z direction.

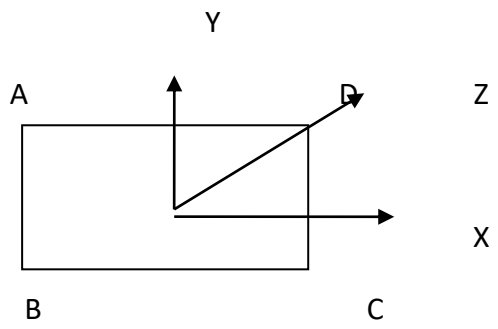

- Let a rectangular plate “ABCD” CAN MOVE IN X-axis Y-axis, and Z-axis (linear movement) also the plate can rotate about X-axis, Y-axis, Z-axis. So the total degrees

of freedom 3+3=6. So the intention of jig and fixture is to prevent all the 6 motion in different direction.

3-2-1 PRINCIPLE OF LOCATION /6 POINT LOCATION:-

- In 3-2-1 principal all the possible movement of rectangular block is restricted by using 6 locations or 6 pin.
- 3 pins are located at the bottom side of the jaw. This 3 locations or pin are restricting the linear movement inZ – axis and rotational motion in z-axis and y-axis.
- 2 pins are located at the back side of the work piece. This 2 pin restrict the linear movement in y-axis and rotational movement in X–axis.
- One point is located at side of the work piece and it restricts the linear movement in x-axis.

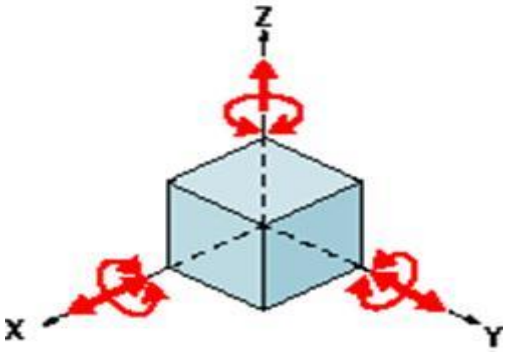

TYPES OF JIG:-

- There are several types of jig used for holding and locating the work piece at the same time guiding the cutting tool. They are

(i) Template jig.
(ii) Plate jig.
(iii) Box jig.
(iv) Pot jig.
(v) Chanel jig.
(vi) Sand witch jig.
(vii) Inducing jig
(viii) Multistation jig.
(ix) Ring jig.
(x) Diameter jig.
(xi) Leaf jig.
(xii) Angle plate jig.

TEMPLATE JIG:-

- It is the simplest form of all the jigs.
- It is the simple of metal, wood or any other suitable material which carries correct location.
- A plate having holes at the desired position serves as template which is fixed on the component to be drilled.
- The drill is guide through these holes up the template and the required holes are drilled on the work piece at the relative position with each other as on the template.
- Example, if a no. of small cast from pipe flanges of same size and shape are to be drilled to have four bolt holes each, the ordinary method will be, to mark the centre of all holes. Separately on each flange and then drilling is done. Hence, the template of same size and shape as the flanges and caring the required no of holes at correct location can be prepared and the required centre of holes marked directly from this template from all the flange, then drilling has to be some on same way as above.

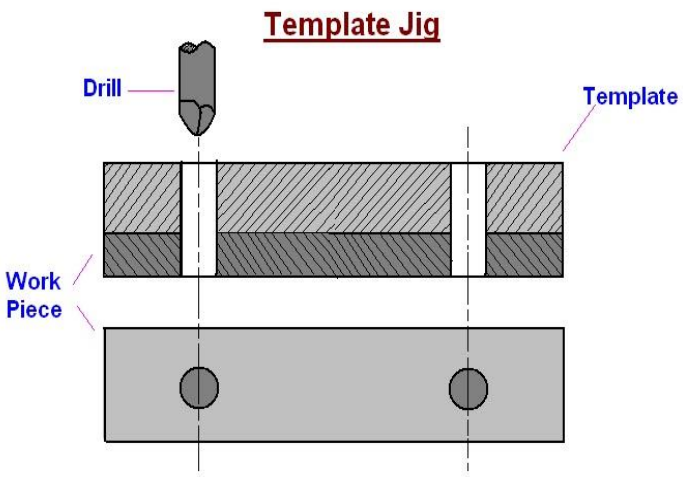

- Template jig is the least expensive and simplest type of jig to use.
- This type of jig is normally used for accuracy rather than speed.
- Template jig fits over on or into the work piece and is not usually clamped.
- Same, shape and size of hole can be drilled.

PLATE JIG:-

- A plate jig is an improvement of template jig. By incorporating drill bushes in the template,
- If the drilling has to be done on large scale, a large no. of similar flanges is to be drilled in such a scale template jig is not sufficient and not economical. A very reasonable and economical improvement over the template method will be to use a plate having drill bushes. And suitable means to hole and locate the work piece. So

the the work can be clamped to the plate and holds drill directly to the bushes tin correct position.

- The plate jigs are employed to drill holes on large part maintaining accurate spacing with each other.

BOX JIG.

- It is named so because of its box shape construction closed from most of the sides.
- Such jigs are normally design and used for those components which carry complicated and irregular shape.
- Such components are usually difficult to held or supported during the operation by hand or in ordinary jigs of other types.
- They need very rigid support from many sides, which can be provided only by box type of jig.
- The body of this jigs is made as like as possible.
- The jigs are generally employed to drill a number of holes on components from different angles.

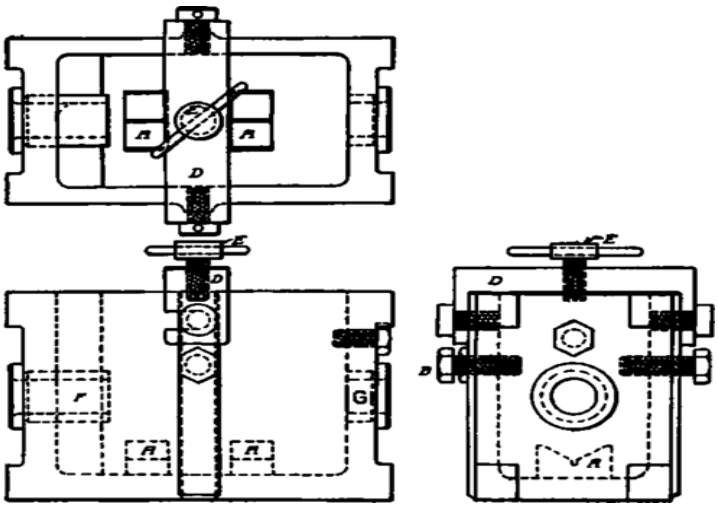

DIAMETER JIG:-

- The diameter jig is used to drill radially holes on a cylindrical or spherical work piece.
- The work is fixed in the V-Block and then clamp by the clamping plate which also locates the work.
- The tool is guided through the drill bush which is radially with the work.

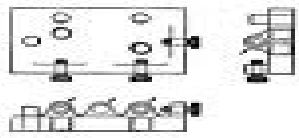

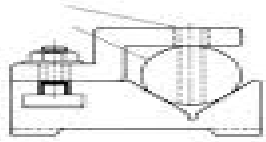

DIFFERENT TYPES OF CLAMP:-

The following are the different types of clamp which are commonly used with Jig & fixture.

1. Screw clamp
2. Flat clamp
3. Wedge clamp
4. Pivoted clamp
5. Latch clamp
6. Equalizing clamp

SCREW CLAMP:-

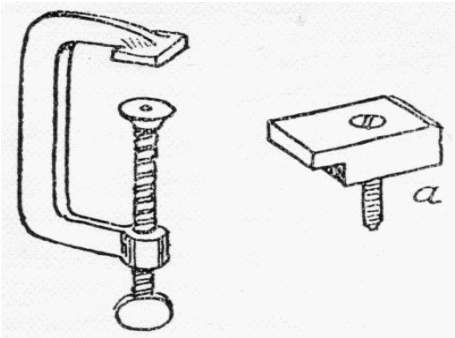

- The screw clamp is used to grip the work on its edge.
- This type of clamping arrangement enables the top surface of the work to be machine without any difficulty.
- Screw clamp offers almost unlimited application potential, lower cost and in many cases less complex design to be machined.

- Screw clamp used the torque develop by a screw thread to hold a part in place. This is done by direct pressure or by acting on another clamp.
- The only disadvantages of using screw clamp are their relatively slow operative speed.

FLAT CLAMP:-

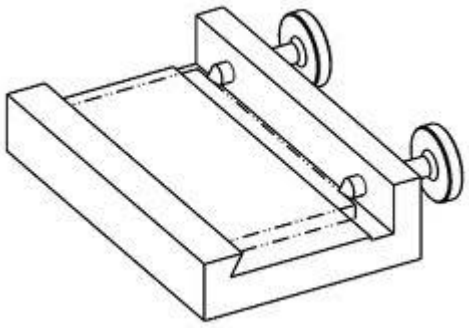

- The flat clamp is support the work by the clamp face which is pressed against the work by tighten the nut.
- This clamp is only used for flat surface.

WEDGE CLAMP:-

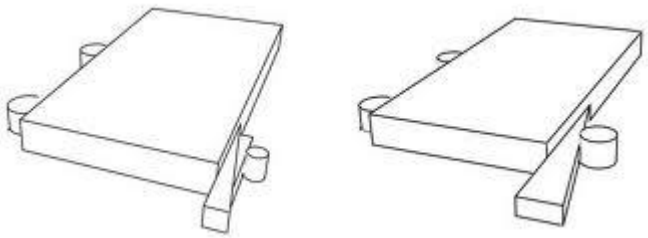

- Wedge clamp applies the basic principle of the inclined plane to hold the work in a manner similar to cam.
- As shown in fig the wedge clamp is employed to grip the work by the wedge block which is made to slide by rotating screw.
- The wedge block grips the work against the fixed bottom and on the other end of the jig & fixture body.

There are two general forms of wedge clamp

- Flat wedge
- Conical wedge

POWDER METALLURGY

The powder metallurgy may be described as an art of manufacturing commercial products from the powdered metals and alloys. The process consists of compressing the irregularly shaped powdered metal particle in a die of the desired shape of the part to be produced. These compressed parts are then heated to bind the particles together and improve their strength and other properties. This process also called **sintering.** The temp during the process is kept below the melting point of the power.

ADVANTAGES OF POWDER METALLURGY:-

- There is no wastage of material through the entire manufacturing process, thus material is saved.
- The part produced have accurate dimensions and surface finish, thus the need for machining operations is eliminated.
- The large quantity production is relatively economical to machine parts.
- The skilled workers are not required to operate presses or other equipment, thus the labor costs are low.
- It is possible to ensure uniformity of composition and structure as the exact desired proportion and purity of various metal powders can be used.
- The parts with controlled porosity can be made.
- The parts of highly refractory metals and high melting point such as tungsten carbide can be produced.
- It is possible to make parts from a mixture of metals and non metals such as motor brushes.
- It is possible to make parts of mixture of metals which do not alloy with each other.

<u>Methods of producing components by powder metallurgy technique</u>

<u>Production of metal powders:-</u>

- A wide range of metal powders comprising of almost all metals and alloys are used in powder metallurgy. Sometimes, the manufacturing process include mixture of both metals and nonmetals like copper and graphite as self-lubricating bearings, dynamo brushes and ceramic-metal mixture for high temperature services.
- The powdered metals are produced by mechanical, physical and chemical means depending upon the particular application involved. The following are the methods commonly used for producing metal powders.

METHODS USED FOR PRODUCING METAL POWDERS:-

i. Crushing
ii. Machining
iii. Milling or grinding
iv. Reduction
v. Condensation of Vapor metal
vi. Atomizing

i. CRUSHING:-

This method is use for brittle material. The crushing equipment used for crushing brittle material may be rapidly moving hammer, jaw crushers etc.

ii. MACHINING:-

This method is employed to produce filling, turning, scratching, chips etc. which are subsequently pulverized by crushing and milling.

iii. MILLING:-

This is the most important and widely used method of producing powder of the required grade of fineness. Though the milling or grinding process is best suited to brittle materials. Milling operation is carried out by using equipment such as ball mill, impact mill, vortex mill, disc mill etc.

iv. REDUCTION:-

In reduction the compound of metals i.e. oxide are reduce with carbon monoxide or hydrogen at temperature bellow the melting point of the metal in an atmosphere control furnace. The reduced product is then crushed and ground.

v. CONDENSATION OF VAPOUR METAL:-

- The technique can be applied in the case of metal such as Zinc, cadmium and magnesium
- First of all, Zinc oxide is mixed with powdered charcoal and heated until zinc vapor is formed by the reaction of zinc oxide with carbon monoxide. The zinc vapor is condensed to the dust like particle by cooling.

vi. ATOMIZING:-

- In this method the molten metal is forced through a nozzle in to a stream of compressed air or water. The metal on cooling solidifies in to tin particle of various size and irregular shape.
- The size of these particles depends upon the size of the nozzle rate of flow of metal, temperature and pressure of water or air stream.

<u>BLENDING:-</u>

- Before the powders are pressed in to shape they are usually blended/mixing further.

- To add lubricants to reduce friction during the pressing operation. Powder particles get coated with lubricants; this reduces wear and lowers the pressure required for pressing.
- to mixed powder of different materials in order to obtained properties like heat resistance, hardness, toughness
- In wet blending water or a solvent is used to obtain better mixing.
- Wet mixing is used for
    - reduce dust
    - Prevents surface oxidation.
    - Lesser explosion hazards.
- Blending is essential when a powder of different metals within same particles size, or when powder of same metal different particles size are used.
- The main purpose of blending/mixing is to produced uniformity of particles size and shape through the large amount of powder
- The blending or mixing of powders is the first step in the manufacture of parts from powdered metals.
- When one metal powder of the correct particle size is used, then no blending is required.
- But blending is essential when powders of the different metals with the same particle size or when powders of the same metal with different particle size are used.
- The main purpose of blending or mixing is produce uniformly of particle size and shape throughout the large amount of powder. This help in better control of subsequent pressing and sintering operation.

BRIQUETTING OR COMPACTING:-

- After the mixing the metal powders thoroughly, the briquetting or compacting is the next process used in the manufacture of parts through powder metallurgy.
- It is the process of converting loose powder particles in to green compact of the desired shape and size. The process is carried out at room temperature in hardened steel dies and punches.
- It is the process of heating the green compact to a temperature bellow the sintering temperature.
- This is necessary to remove the lubricants and binders added during blending and to increase the strength of green compact. This process is not applied to all metals.
- Compacting impacts adequate strength for handling.
- Powders are compacted by using high pressure. The degree of pressure required depends upon the density of final product.
- The pressure used for compacting process may be either mechanical or hydraulically or combination or both.

PRESINTERING:-

- It is the process of heating the green compact to a temperature bellow the sintering temperature. This is necessary to remove the lubricant and binders added during blending and to increase the strength of green compact.

SINTERING:-

- Sintering may be defined as the heating of loose or compacted agrigriate metal powders below the melting point of the base metal with or without the application of external pressure in order to transform to a more dense material by inter particle bonding.
- The temperature of the furnace in sintering is always maintained below the melting temp. Of base metal. Because it is very difficult to melt the base metal such as tungsten oxide, aluminum oxide whose melting temperature is around $3000\mathring{c}\ to\ 3500\mathring{c}$.
  - It is the process of heating the briquetted component at an elevated temperature in a furnace under reduced atmospheric conditions.
  - The atmospheric condition is necessary to prevent any oxidation. The sintering temperature is kept bellow the melting point of the major constituent in the components.
  - The sintering process increases density, porosity, mechanical strength and ductility of the component.

Applications:-

- Manufacturing of brake linings, clutch plate, connecting rod crank shaft, cam shaft and piston rings.

- Porous material such as bearing & filters can be manufactured.

- Tungsten filaments of electric bulb, radio valves, x-ray tube, oscillator valve.

- Military defence application.

- Atomic energy application.

- Manufacturing of grinding wheels.

- Clocks & timing devices, type writers, calculators, and permanent magnet can be manufactured.

- Manufacturing of toothed components like gear.

- Material which are very difficult for machining- wire drawing dies, press tools, stone hammers & rock drilling bits can be manufactured.
- Manufacturing of nozzles for rocket & missiles.

- Jet engine parts.

Advantages:-

- Accuracy is better

- Surface is good.

- Machining Processes are eliminated.

- Longer life of the product.

- Uniformity of structure.

- Void, blow holes are absent

- No material is wasted as scrap.

- Highly gratified labour is not required.

- Porous parts can be manufactured.

- Mixed powders of copper & lead can be successfully shaped by powder metallurgy.

- Product cost is cheaper.

- Hard tool bits can be formed.

Disadvantages:-

- Complicated shapes cannot be achieved.

- Don't have good physical properties.

WELDING

Introduction:-

- The welding is a process of joining two similar or dissimilar metals by fusion, with or without the application of pressure and with or without the use of filler metal. The fusion of metal takes place by means of heat.
- The process of joining similar metals by melting the edges together, without the addition of filler metal, is called autogeneous welding.
- The process of joining similar metals with the help of filler rod of the same metal is called homogeneous welding.

- The process of joining dissimilar metals using filler rod is called heterogeneous welding. The filler rod material is such that its melting point is less than the parent metals.

Classification Of Welding Process:-

The welding is broadly divided into the following two groups:

- **Forge or pressure welding:-** In forge or pressure welding(also known as plastic welding), the work pieces are heated to plastic state and then the work pieces are joined together by applying pressure on them. In this case no filler material is used.
- **Fusion or non-pressure welding:-** In fusion welding, the edge of work pieces to be joined and the filler material are heated to a temperature above the melting point of the metal and then allowed to solidify.

In general, various welding and allied processes are classified as follows:

1. Gas Welding
   i. Air Acetylene Welding.
   ii. Oxy hydrogen welding.
   iii. Oxyacetylene Welding.
   iv. Pressure gas Welding.
2. Arc Welding
   -Carbon Arc Welding -Shielded Metal Arc Welding
   -Flux Cored Arc Welding -Submerged Arc Welding
   -TIG (or GTAW) Welding -MIG (or GMAW) Welding
   -Plasma Arc Welding
   -Electroslag Welding and Electro gas Welding
   -Stud Arc Welding.

3. Resistance Welding
   -Spot Welding -Seam Welding
   -Projection Welding -Resistance Butt Welding
   -Flash Butt Welding -Percussion Welding
   -High Frequency Resistance Welding.
4. Solid State Welding
   -Cold Welding -Diffusion Welding
   -Explosive Welding -Forge Welding
   -Friction Welding -Hot Pressure Welding
   -Roll Welding -Ultrasonic Welding

5. Thermo-Chemical Welding Processes.
   -Thermit Welding -Atomic Hydrogen Welding.
6. Radiant Energy Welding Processes
   -Electron Beam Welding -Laser Beam Welding.

Types of welded joints :- The relative positions of the two pieces being joined determine the type of joint. The following are the five basic types of joints commonly used in fusion welding.

1. **Lap joint: -** The lap joint is obtained by overlapping the plates and then welding the edges of the plates. These joints are employed on plates having thickness less than 3 mm. The lap joint may be
   i) Single transverse
   ii) Double transverse
   iii) Parallel lap
2. **Butt joint: -** the butt joint is obtained by welding the ends or edges of the two plates which are approximately in the same plane with each other. In butt welding the plate edges do not require beveling if the thickness of plate is less 5 mm. on the other hand, if the plate thickness is 5 mm to 12.5 mm, the edges should be beveled to V or U – groove and plates having thickness above 12.5 mm should have a v or U – groove on both sides. The butt joints may be
   i) Square butt joint
   ii) Single V – butt joint
   iii) Double V – butt joint
   iv) Single U – butt joint
   v) Double U – butt joint
3. **Corner joint: -** The corner joint is obtained by joining the edges of two plates whose surfaces are at an angle of approximately 90° to each other. It is used for both light and heavy gauge sheet metal. In some cases corner joint can be welded, without any filler metal, by melting off the edges of the parent metal.
4. **Edge joint: -** The edge joint, is obtained by joining two parallel plates. It is economical for plates having thickness less than 6 mm.
5. **T – Joint:-** The T- joint is obtained by joining two plates whose surfaces are approximately at right angles to each other. It is widely used to weld stiffeners in air craft and other thin walled structures. These joints are suitable upto 3 mm thickness.

COMMONLYWELDED BASEMETALS:-

- Metal can be classified as:
  1. Ferrous 2. Non-ferrous.

- Ferrous materials contain iron and the one element people use more than all others is iron. Ferrous materials are the most important metals/alloys in the metallurgical and mechanical industries because of their very extensive use.

Ferrous materials finding day-to-clay welding applications are:

1. Wrought iron.
2. Cast iron.
3. Carbon Steels (Low, Medium and High Carbon Steels).
4. Cast steels.
5. Alloy Steels.
6. Stainless Steels, etc.

- Non-ferrous materials are those that are not iron-based.

Like ferrous materials, non-ferrous materials also find extensive industrial applications.

Non-ferrous materials finding day-to-day welding applications are:

7. Aluminium and its alloys.
8. Copper and its alloys.
9. Magnesium and its alloys.
10. Nickel and its alloys.
11. Zinc and its alloys, etc.

ADVANTAGES OF WELDING:-

(i) A good weld is as strong as the base metal.
(ii) General welding equipment is iron very costly.
(iii) Portable welding equipments are available.
(iv) Welding permits considerable freedom in design.
(v) A large number of metals/alloys both similar and dissimilar can be joined by welding.
(vi) Welding can join work pieces through spots, as continuous pressure tight seams, end-to-end and in a number of other configurations.
(vii) Welding can be mechanized.

DISADVANTAGES OF WELDING:-

(i) Welding gives out harmful radiations (light), fumes and spatter.
(ii) Welding results in residual stresses and distortion of the work pieces.
(iii) Jigs and fixtures are generally required to hold and position the parts to be welded.
(iv) Edge preparation of the work pieces is generally required before welding them.
(v) A skilled welder is a must to produce a good welding job.
(vi) Welding heat produces metallurgical changes. The structure of the welded joint is not same as that of the parent metal.
(vii) A welded joint, for many reasons, needs stress-relief heat-treatment.

PRACTICAL APPLICATIONS OF WELDING:-

-Welding has been employed in Industry as a tool for:

(a) Regular fabrication of automobile cars, air-crafts, refrigerators, etc.

(b) Repair and maintenance work, e.g., joining broken parts, rebuilding worn out components, etc.

- A few important applications of welding are listed below:

1. Air craft Construction
   (a) Welded engine mounts.
   (b) Turbine frame for jet engine.
   (c) Rocket motor fuel and oxidizer tanks.
   (d) Ducts, fittings, cowling components, etc.
2. Automobile Construction
   (a) Arc welded car wheels. (b) Steel rear axle housing.
   (c) Frame side rails.
   (d) Automobile frame, brackets, etc.
3. Bridges
   (a) Pier construction. (b) Section lengths.
   (c) Shop and field assembly of lengths, etc.
4. Buildings
   (a) Column base plates. (b) Trusses. (c) Erection of structure, etc.
5. Pressure Vessels and Tanks
   (a) Clad and lined steel plates. (b) Shell construction.
   (c) Joining of nozzles to the shell, etc.
6. Storage Tanks
   (a) Oil, gas and water storage tanks.
7. Rail Road Equipment
   Locomotive
   (a) Under frame. (b) Air receiver.
   (c) Engine. (d) Front and rear hoods, etc.
8. Piping and Pipelines
   (a) Rolled plate piping. (b) Open pipe joints.
   (c) Oil gas and gasoline pipe lines, etc.
9. Ships
   (a) Shell frames.
   (b) Deck beams and bulkhead stiffeners.
   (c) Girders to shells
   (d) Bulkhead webs to plating, etc.
10. Trucks and trailers.

11. Machine tool frames, cutting tools and dies.
12. Household and office furniture.
13. Earth moving machinery and cranes.

In addition, arc welding finds following applications in repair and maintenance work:

14. Repair of broken and damaged components and machinery such as tools, punches, dies, gears, shears, press and machine tools frames.
15. Hard-facing and rebuilding of worn out or undersized (costly) Parts rejected during inspection.
16. Fabrication of jigs, fixtures, clamps and other work holding devices.

Fluxes:-

When metals are heated, the oxygen from the air combines with them and form oxides. These oxides produce poor quality and low strength welds. In some cases, it makes the welding impossible. Thus in order to prevent oxidation and other unwanted chemical reactions during welding fluxes is used. The fluxes are chemical compounds and form a fusible slag with the oxides of most metals at the welding temperature. The slag floats to the top of the molten metal and do not interfere with the deposition and fusion of filler metal. A good flux protects the molten metal from atmospheric oxygen and prevents the absorption and reaction of other gases in the flame. In addition, it helps to clean and protect the surfaces of the base metal.

The fluxes are available in several forms, such as a dry powder, a paste or thick solution or as a preplaced coating on the welding rod. The dry fluxes are applied by heating the end of the welding rod and dipping it into the powdered material. The flux adheres to the heated surface and is consumed with the rod during welding operation. The fluxes in the paste form are usually applied on the base metal with a brush, while the welding rod is either painted or dipped.

A single flux is not suitable for welding all metals. The ordinary grades of mild steels are successfully welded without the use of a flux. (The commonly used fluxes for welding different metals are as follows:

1. For ferrous metals, the fluxes used are borax, sodium carbonate, sodium bicarbonate and sodium silicate.
2. For copper and its alloys, the fluxes used are mixtures of sodium and potassium borates, chlorides, carbonates, sulphates and boric acid.
3. For aluminium, the fluxes used are alkaline fluorides, chlorides and bisulphate.
4. For magnesium alloys, the fluxes used are similar in composition to those used for aluminium and its alloys.

Since all the fluxes are chemically active and very corrosive, therefore it is very essential to remove all traces of flux from the finished weld. The flux residue may be removed by hot water, steam or by chipping hammer.

No Flux is used in the Gas Welding of Steel:-

Fluxes are used in the gas welding of cast iron, stainless steel metals other than Lad, zinc and some precious metals.

Flux for Welding Cast Iron:-

The use of a suitable flux is essential when gas welding cast iron. The flux increases the fluidity of the fusible iron-silicate slag, as well as aids in the removal of the slag.

Fluxes for gray iron rods are usually composed of borates or boric acid, soda ash etc.

Flux for Welding Stainless Steel:-

A flux is needed to ensure better control of the molten metal and to make possible a sound, clean, good-appearing weld.

Flux should be applied at the underside of the seam also to prevent oxidation.

Flux for Welding Aluminium and its Alloys:-

A flux is necessary for welding aluminium because of the formation of oxide film on the metal. This film of aluminium oxide will prevent the formation of a sound weld. A flux when used breaks down the oxides and changes them into a fusible slag. The fusible slag being lighter than the base metal floats to the surface of the weld puddle.

GASWELDING:

Definition

- Gas welding is a fusion-welding process. It joins metals, using the heat of combustion of an oxygen/air and fuel gas (i.e. acetylene, hydrogen, propane or butane) mixture. The intense heat (flame) thus produced melts and fuses together the edges of the parts to be welded, generally with the addition of a filler metal.

Principle of Operation:-

- When acetylene is mixed with oxygen in correct proportions in the welding torch and ignited, the flame resulting at the tip of the torch is sufficiently hot to melt and join the parent metal.
- The oxy-acetylene flame reaches a temperature of about 320VC and thus can melt all commercial metals which, during welding, actually flow together to form a complete bond. A filler metal rod is generally added to the molten metal pool to build up the seam slightly for greater strength.
- Oxy-acetylene welding does not require the components to be forced together under pressure until the weld forms and solidifies.

To Ignite A Flame:-

- Open the acetylene control valve of the welding torch and after the system has been flushed clean of air the gas is ignited. At this stage, enough of oxygen is drawn in from the atmosphere to burn acetylene partially.
- The acetylene control valve is then adjusted until the flame ceases to smoke.
- The oxygen control valve of the welding torch is then opened in order to adjust the proportions in which acetylene and oxygen are required to mix and burn.
- This results in three distinct types of flames as discussed under.

Types of Welding Flames:-

1. Neutral Flame (Acetylene oxygen in equal proportions)
2. Oxidising Flame (Excess of oxygen)
3. Reducing Flame (Excess of acetylene).

- In oxy-acetylene welding, flame is the most important tool. All the welding equipment simply serves to maintain and control the flame.

The correct type of flame is essential for the production of satisfactory welds.

The flame must be of the proper size, shape and condition in order to operate with maximum efficiency.

Neutral Flame:-

- A neutral flame is produced when approximately equal volumes of oxygen and acetylene are mixed in the welding torch and burnt at the torch tip. (More accurately the oxygen-to-acetylene ratio is 1.1 to 1).
- The temperature of the neutral flame is of the order of about 5900"F (3260^{0}c).
- The flame has a nicely defined inner cone* which is light blue in colour. It is surrounded by an outer flame envelope, produced by the combination of oxygen in the air and superheated carbon monoxide and hydrogen gases from the inner cone. This envelope is usually a much darker blue than the inner cone.
- A neutral flame is named so because it affects no chemical change on the molten metal and, therefore, will not oxidize or carburize the metal.
- The neutral flame is commonly used for the welding of:

(i) Mild steel
(ii) Cast Iron
(iii) Stainless steel
(iv) Copper
(v) Aluminium

Oxidising Flame:-

- If, after the neutral flame has been established, the supply of oxygen is further increased, the result will be an oxidising flame. An oxidising flame can be recognised

by the small cone which is shorter, much bluer in colour and more pointed than that of the neutral flame.

The outer flame envelope is much shorter and tends to fan out at the end; on the other hand, the neutral and carburizing envelopes tend to come to a sharp Point'

- An oxidising flame burns with a decided loud roar.
- An oxidising flame tends to be hotter than the neutral flame. This is because of excess oxygen and which causes the temperature to rise as high as 6300^0F.
- The high temperature of an oxidizing flame (O_2 : C2H = 1.5 : 1) would be an advantage if it were not for the fact that the excess oxygen, especially at high temperatures, tends to combine with many metals to form hard, brittle, low strength Oxides. Moreover, an excess of oxygen causes the weld bead and the surrounding area to have a scummy or dirty appearance.
- For these reasons, an oxidising flame is of limited use in welding. It is not used in the welding of steel.

A slightly oxidising flame is helpful when welding most

(i)Copper base metals (ii) Zinc-base metals, and

(iii) A few types of ferrous metals, such as manganese steel and cast iron.

The oxidizing atmosphere, in these cases, creates a base-metal oxide that protects the base metal. For example, in welding brass, the zinc has a tendency to separate and fume away. The formation of a covering copper oxide prevents the zinc from dissipating.

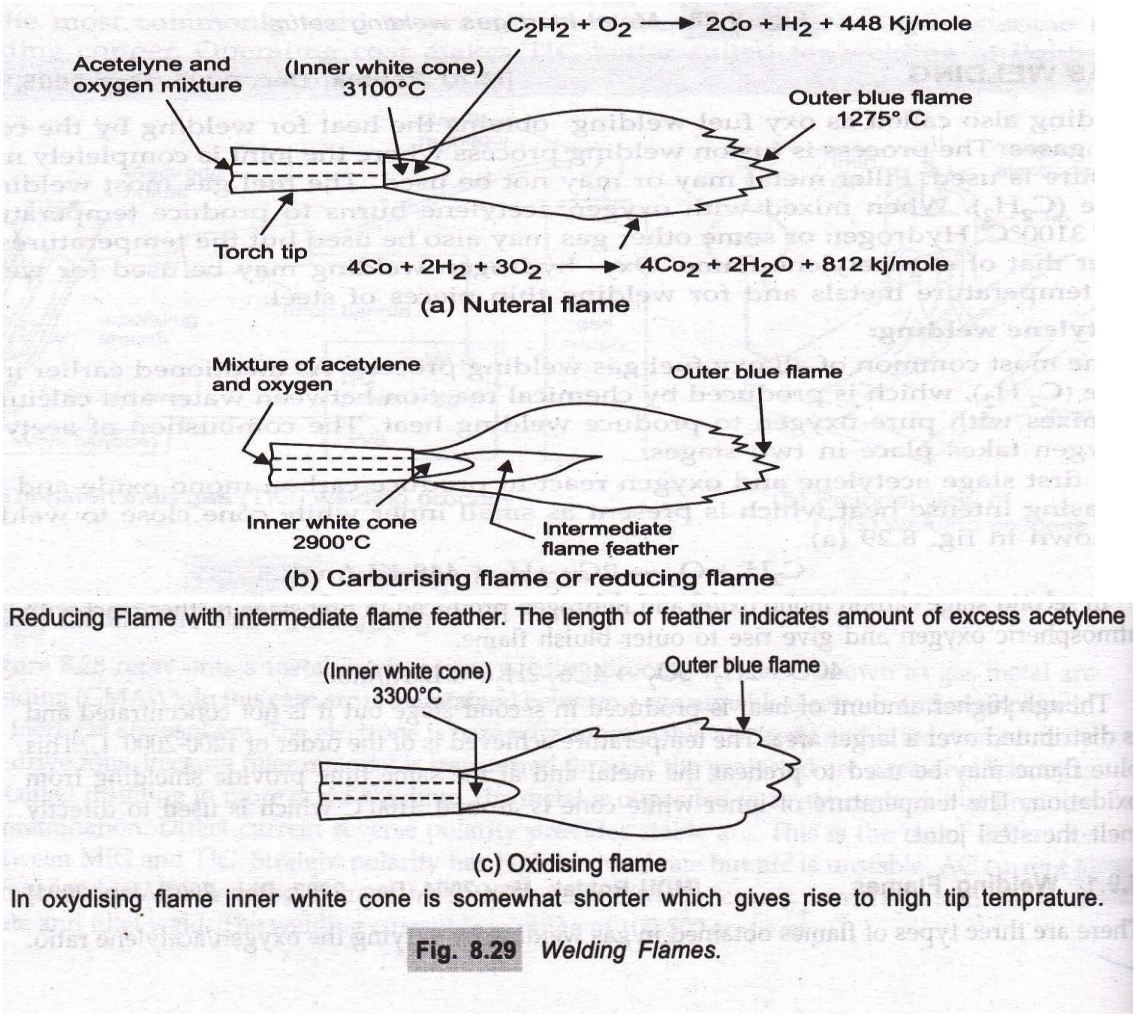

Fig. 8.29 *Welding Flames.*

<u>Reducing Flame:-</u>

- If the volume of oxygen supplied to the neutral flame is reduced, the resulting flame will be a carburising or reducing flame, i.e., rich in acetylene.

- A reducing flame can be recognized by acetylene feather which exists between the inner cone and the outer envelope. The outer flame envelope is longer than that of the neutral flame and is usually much brighter in colour.

- A reducing flame does not completely consume the available carbon; therefore, its burning temperature is lower and the leftover carbon is forced into the molten metal. With iron and steel it produces very hard, brittle substance known as iron carbide. This chemical change makes the metal unfit for many applications in which the weld may need to be bent or stretched. Metals that tend to absorb carbon should not be welded with reducing flame.

- A reducing flame has an approximate temperature of 5500^0F (3038"C).

- A reducing flame may be distinguished from carburizing flame by the fact that a carburising flame contains more acetylene than a reducing flame.

A carburizing flame is used in the welding of lead and for car burning (surface hardening) purposes.

A reducing flame, on the other hand, does not carburize the metal; rather it ensures the absence of the oxidizing condition. It is used for welding with low alloy steel rods and for welding those metals, (e.g. non ferrous) that do not tend to absorb carbon. This flame is very well used for welding high carbon steel.

To conclude, for most welding operations, the Neutral Flame is correct, but the other types of flames are sometimes needed for special welds, e.g., non-ferrous alloys and high carbon steels may require a reducing flame, whilst zinc-bearing alloys may need an oxidising flame for welding purposes.

GAS WELDTNG EQUIPMENTS:-

The basic equipments used to carry out gas welding are:

1. Gas cylinders.
   i) Oxygen gas cylinder
   ii) Acetylene gas cylinder
2. Pressure regulators.
   i) Oxygen pressure regulator
   ii) Acetylene pressure regulator.
3. Hose and Hose fittings.
   i) Oxygen gas hose (Blue)
   ii) Acetylene gas hose (Red).
4. Welding torch
5. Welding torch tip or nozzle.
6. Filler rods and fluxes.
7. Protective clothing for the welder (e.g., asbestos apron, gloves, goggles, etc.).

1. **Gas cylinders:-**

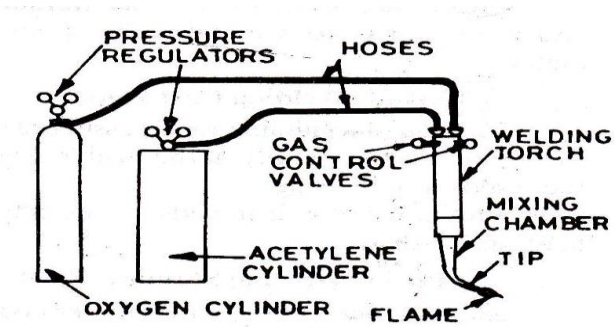

Fig. 11.5. Oxy-acetylene welding equipment

The oxygen and acetylene are usually obtained from strong steel cylinders, which are filled by commercial suppliers of these gases. The oxygen cylinders are usually filled

at a pressure of 12.5 to 14 MN/m^2 and have capacity of 6.23 cubic metre. The mass of oxygen cylinder is approximately 66 kg when it is full. The standard colour for the oxygen cylinder is black. The acetylene is stored in cylinders under an initial pressure of 15 atmospheres ($1.545 kN/m^2$) and have the capacity of 7.6 cubic metre. Its mass is about 86 kg when it is full. The acetylene cylinders are equipped with fusible plugs at the bottom in order to save the cylinder from explosion in case of fire. The standard colour for the acetylene cylinder is maroon.

The pure acetylene is not stable at pressures above atmospheric pressure (i.e., 103N/m2) and may decompose explosively. Therefore, in order to store acetylene at l5 atmospheres, it is dissolved in *acetone which is capable of absorbing a large volume of acetylene and of releasing it as the pressure falls. One volume of acetone at l5t and at atmospheric pressure dissolves about 25 volumes of acetylene. The dissolving capacity grows in proportion to the pressure so that at the same temperature but at 15 atmospheres acetylene pressure, one volume of acetone absorbs 25 x 15=375 volumes of acetylene. The cylinder is first filled with a dry porous material (e.g., charcoal or asbestos) which keeps the acetylene well separated. Then the tank is partially filled with acetone and acetylene is dissolved in it under a pressure of 15 atmospheres.

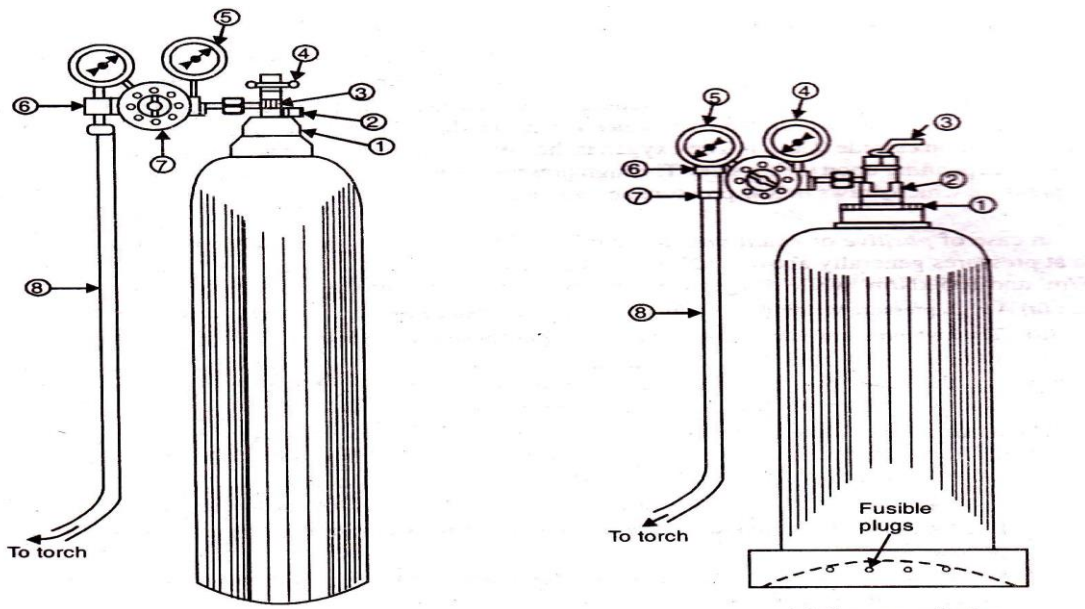

(*b*) Acetylene cylinder.
1. Fusible plugs. 2. Acetylene cylinder valve. 3. Valve wrench. 4. Cylinder pressure gauge. 5. Regulator outlet pressure gauge. 6. Acetylene regulator. 7. Adjusting screw. 8. Acetylene hose to torch.

(*a*) Oxygen cylinder.
1. Cap. 2. Bursting disc. 3. Oxygen valve. 4. Handwheel. 5. Pressure gauge. 6. Oxygen regulator. 7. Adjustment screw. 8. Oxygen hose to torch.

Fig. 15.28. Parts of gas cylinder.

2. **<u>Pressure regulators:-</u>**

The pressure regulators perform the following functions :

(i) It reduces the source pressure (from generator, cylinder, manifold or pipe line) to a workable pressure.

(ii) it maintains the constant delivery pressure and gas volumetric rate regardless of pressure variations at the source.

(iii) It permits adjustment to deliver gas at a certain desired pressure within its rated pressure range.

The mechanical details of a regulator may differ among the different manufacturers, but the fundamental operating principles are the same for all regulator. Generally a pressure regulator has a union nipple to attach it to the cylinder and an outlet connection for the hose leading to the torch. There are two gauges on the body of the regulator, one showing pressure in the cylinder while the other shows pressure being supplied to the torch. The working pressure is adjusted by the operator according to the requirements of the job. The desired pressure at the welding torch for oxygen is between 70 and 280kN/m^2 and for acetylene it is between 7 and 103kN/m^2.

3. **Hose and hose fittings:-** The hose for welding torches should be strong, durable, non porous, light and flexible. Two lengths of hose (one for oxygen and one for acetylene) are required to connect the regulator and the torch. The standard colour for oxygen hose is black and for acetylene hose it is red. The special hose fittings or connections are provided for attachments to the torch and pressure regulators.
4. **Welding torch:-**

The welding torch (also known as blow pipe) is a tool for mixing the oxygen and acetylene in the desired volumes and burning the mixture at the end of a tip, which produces a high temperature flame. The welding torches have a handle at one end with two inlet connections for gases. Each inlet has a valve that controls the volume of oxygen or of acetylene passing through them. The desired proportions of oxygen and acetylene are thoroughly mixed, in the mixer, before issuing from torch to the tip or nozzle. The flame is produced by igniting the mixture at the torch tip.
The welding torches are commercially available in the following two types:-

(i) Injectors or low pressure type; and

(ii) Positive or equal-pressure (also known as high pressure) type.

The principal difference between these types of torches is in the gas mixing chambers or gas mixer. A gas mixing chamber must be able

(a) To mix gases thoroughly for proper combustion,

(b) To arrest flash backs that might occur through improper operation,

(c) To stop any flame, travelling back through the tip at the mixer, and

(d) In some designs, to permit a range of tip sizes to be operated by the one size of mixer.

The injector or low pressure type welding torch operates at an acetylene pressure of less than 7kN/m^2. This low pressure acetylene is produced at the welding site by the chemical reaction between water and calcium carbide (CaC_2). The oxygen is, however, supplied at a pressure ranging from 70 to 280kN/m^2 depending upon the tip size. The high pressure oxygen passing through the venturi creates a low pressure which draws in low pressure acetylene and mix with it before both gases pass into the tip.

In case of positive or equal pressure type welding torch, the gases must be delivered to the torch at pressures generally above 7kN/m^2. In the case of acetylene, the pressure must be between7kN/m^2 and 105kN/m^2 while oxygen is generally supplied at approximately same pressure.

Notes:-

(a) A high pressure welding torch should never be connected to a low pressure acetylene line.

(b) The high pressure acetylene is usually stored in strong steel cylinders.

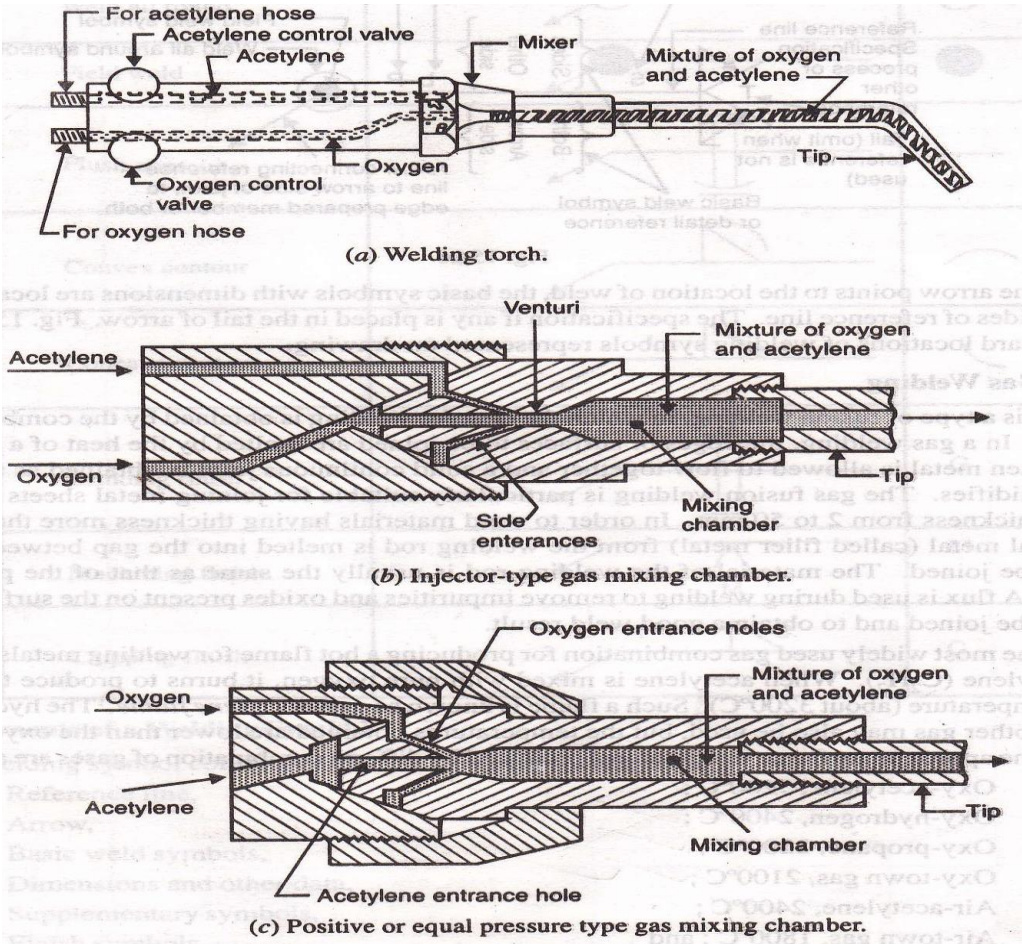

Fig. 15.27.

5. Welding torch tip:- The welding torch tip (also called nozzle) is that portion of torch through which the gases pass just prior to their ignition and burning. The tips are made of high thermal conductivity material, such as copper or copper alloy. The tip size is measured by the diameter of the central hole through which the gaseous mixture passes. The tip size depends upon the thickness of the material to be welded. The interchangeable tips for the various thicknesses are usually provided with each welding torch.

<u>Electric Arc Welding:-</u>

INTRODUCTION:- The arc welding is a fusion welding process in which the welding heat is obtained from an electric arc between the work and the electrode. The electric arc is produced when two conductors of an electric circuit are touched together and then separated by a small distance. The temperature of heat produced by the electric arc is of the order of 6000°C to 7000°C. The most common method of arc welding is with the use of a metal electrode which supplies filler metal.

Electric arc welding is one of the most versatile joining processes and is externally used all over the world. One of the attractive features of arc welding is ease of use and high production rate that can be achieved economically.

Arc welding is a fusion welding process where fusion is obtained by heat produced by an electric arc. The arc may be obtained:

a) Between work piece and consumable electrode (acts as filler material also) as in shielded metal arc welding (SMAW), MIG welding etc.
b) Between work piece and non consumable electrode as in tungsten inert gas arc welding.(TIG welding)
c) Between two non consumable electrodes as in carbon arc welding.
d) Or between metal pieces which are to be welded together.

In arc welding Process when consumable electrodes are used it also acts as filter material continuously & deposited into the joint to make the weld. When non consumable electrodes are used separated filler metal rods are used.

Principle Of Arc Welding:-

First, the contact is made between two conductors of electricity anode and cathode to create an electric circuit. When the flow of current is established they are separated by small distance and arc is formed. Actually arc is a sustained electric discharge through the ionized gas column (called plasma) between two electrodes.

Electrons liberated from cathode move towards the anode and when they strike anode at high velocity large are amount of heat generated. Positively charged ions moving from anode are impinging in cathode thus liberating heat. About 75% of heat is generated at the anode by striking electrons. Thus electric energy is converted into intense heat in the arc which attains the temperature around 5500^0cs.

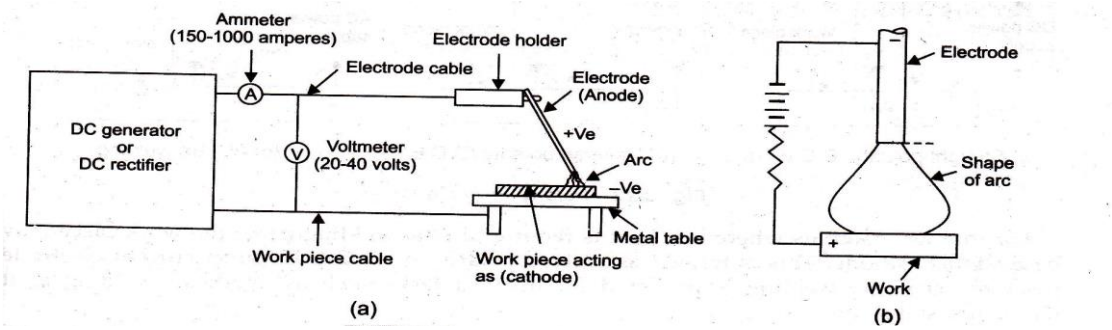

Basic circuit for arc welding (DC arc welding with reverse polarity). Basic shape arc between electrode and work piece.

The potential difference between the electrodes and air gap between electrodes are two significant parameters which are to be controlled efficiently. If the air gap becomes too large for voltage the arc may be extinguished. Larger air gap requires higher potential differences. The fig. shows basic circuit for arc welding. The sources of current may be alternating current or direct current. The work piece is kept on the metallic table. One cable from power supply is connected to the electrode holder into which the electrode is gripped. Other lead is connected to the metallic table on

which work piece is kept. When the electrode is brought into contact with work piece arc generates and welding takes place.

Arc Welding Equipment:-

The arc welding machines can be classified into two categories depending upon the source of electric power.

1. Alternating current machines.
2. Direct current machines.

Either alternating current or direct current can be used for electric arc welding.

Direct current arc welding is more expensive than AC arc welding; even then DC arc welding is preferred because of the control of heat input and easy arc maintenances.

Polarity In Arc Welding:-

As discussed earlier in case of DC arc welding about 60-70% of heat is generated at anode and rest of the heat is generated at cathode. So if more heat is required on the work piece side, say for welding thick materials and materials having thigh thermal conductivity. The work piece may be made as anode (and electrode in the electrode holder of welding machine is working as cathode) liberating large heat near it. This arrangement is termed as straight polarity or D C E N (direct current electrode negative).

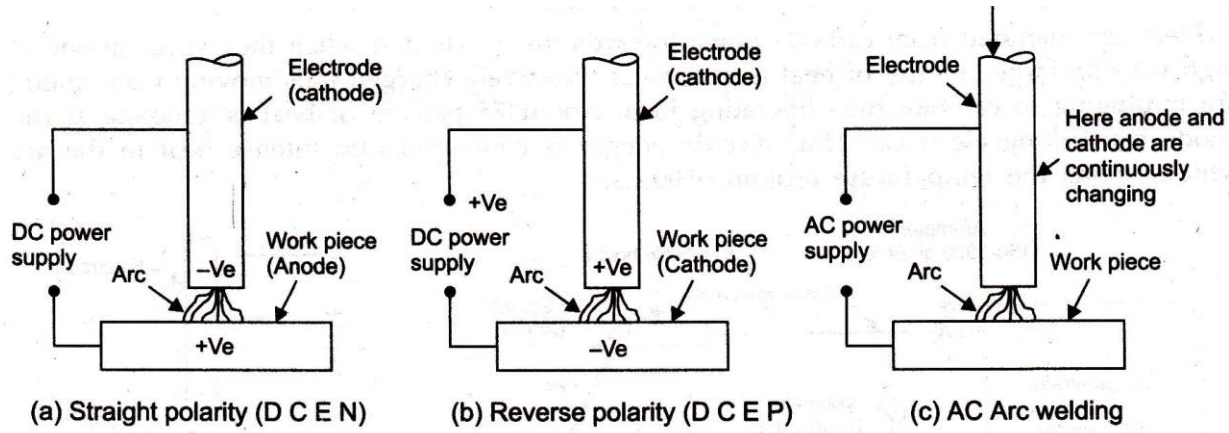

Fig. 8.23 *Polariy in arc welding.*

For thinner materials where less heat is required in the welding zone, the work piece may be made as cathode. This is termed as reverse polarity or D C E P (direct current electrode positive). D C arc welding is preferred for difficult tasks such as overhead welding as it maintains stable arc.

For AC arc welding there is no question of polarity because anode and cathode will interchange after every half cycle, so heat generated at each electrode is same.

The penetration obtained in straight polarity is large. In reverse polarity penetration is small.

Arc Welding Electrodes:-

The electrodes used for providing heat are of two types.

1. Consumable electrodes.
2. Non consumable electrodes.

Consumable Electrodes:-

Welding using a consumable electrode is most common method now days. Here electrode consumed continuously and acts as filler material. The melting temperature of consumable electrode is below the temperature of arc. Since the electrode continuously melts the function of providing a filler metal and heat are both built into a single electrode. The consumable electrode must be continuously moved towards the work piece to maintain a stable arc and satisfactory welding condition.

In all the process using consumable electrodes it is better to connect the electrode to the positive terminal (reverse polarity) because more heat is generated on the electrode side and transfer of metal from consumable electrode of work piece is more uniform and better directed. It also provides necessary cleaning action metal with oxide layer such as aluminium.

Consumable electrodes are made of various materials depending upon the purpose and chemical composition of metals to be welded. They may be made of steel, cast iron, aluminium, copper, brass or bronze. When consumable electrode is used welding process is called metal arc welding.

The consumable electrode may be either bare or coated type. The coated electrodes most commonly known as stick electrodes are used in manual arc welding Process. The stick electrodes are normally available in diameters 3.2, 4, 5, 6, 8, and 9 mm and the length is 350 or 400 mm.

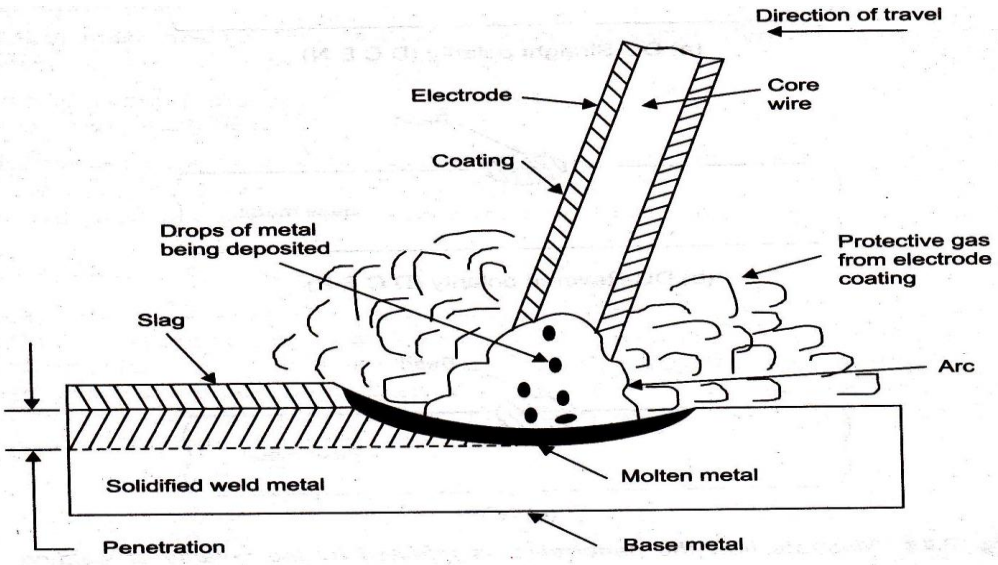

Fig. 8.25 *Important features of arc welding processes usng coated electrodes*

Characteristics Of Coated Electrodes:-

Coating on the electrodes and many desirable characteristics and serve following purpose:

i. Coating on the electrode provides a gas shielding around the arc to eliminate the formation of undesirable oxides and nitride, which would otherwise form by reacting with atmospheric oxygen and nitrogen.
ii. Coating forms a slag which being lighter than molten metal floats on the top of puddle and protects against the surrounding air during weld bead solidification.

It also helps metal to cool slowly, preventing the formation of brittle weld.

iii. Elements for stabilization of arc are added to these coatings.
iv. Alloying elements can also be added through these coatings to improve the strength and physical properties of weld metal.

Moisture is one of the major problems with coated electrodes. Therefore, it is preferable that should be kept in a oven to keep them thoroughly dry.

Non-consumable Electrode:-

When non consumable electrodes are used separates filler metals rods are used. We may say that in case of welding Processes using non consumable electrodes heat source and filler metal deposition can be separately controlled. For all processes using non consumable electrodes it is better to connect the electrode to the negative terminal (straight polarity) to keep the heat losses minimum. However, in case of welding aluminium and magnesium it is preferable to use AC power supply.

Non consumable electrodes are usually made of Tungsten, Graphite or carbon: When non consumable electrodes are used processes are named after the electrode material like tungsten arc welding (tungsten is used as electrode) or carbon arc welding (carbon is used as electrode).

Electric resistance welding:-

Electric resistance welding is a fusion welding process where both heat and pressure are applied on the joint but no filler material or fluxes are added. Resistance welding is based on well known principal that heat is generated by the resistance offered to flow of current. Resistance welding has wide applications in welding of sheet metal of all engineering material (except Cu, Ag), automobile and aircraft industries, pipe and tubing production.

A resistance welding is a pressure welding. When a high current is supplied through the work pieces high resistance produces at the point of contact. The high current and high resistance generates intense heat required for the welding purpose. A pressure is then applied to complete the weld. No filler metal is needed.

Types Of Electrical Resistance Welding:-

The electric resistance welding may be classified as follows:

1. Spot welding,
2. Roll spot and seam welding,
3. Projection welding,
4. Butt welding, and
5. Flash welding.

We shall now discuss these types of electric resistance welding, in detail. in the following articles.

Spot Welding:- The spot welding is used for welding lap joints, joining components made from plate material having 0.025 mm to l.25 mm in thickness. The plate thickness is limited by the pressure and current capacity of the available spot welding machine. The plates to be joined together are placed between the two electrode tips of copper or copper alloy. A low Voltage and high amperage current is passed between electrodes, causing the metal temperature to be raised to welding temperature. The heat generated by the electric current is rapidly transferred from the outer faces of the plates to the electrodes which are water cooled. The pressure is applied which squeezes the metal together and thus completes the weld' A spot welding machine is shown in Fig. The spot welding is used for welding most of the ferrous and non-ferrous alloys. It is widely used in manufacturing automobiles, refrigerators and other metal stamping assemblies.

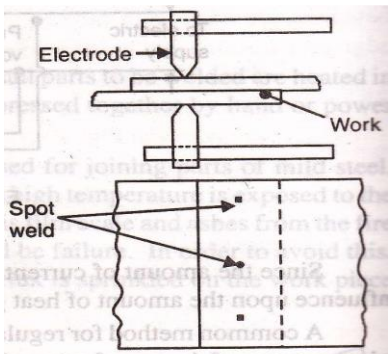

Fig. 15.9. Spot welding.

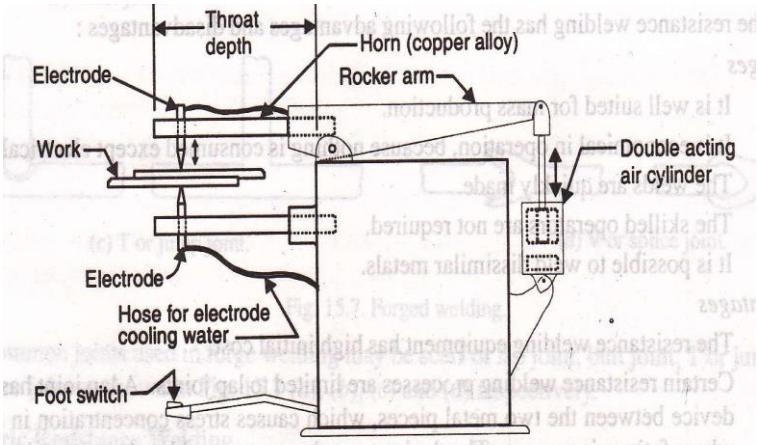

Fig. 15.10. Spot welding.

Spot welding is a resistance welding process in which over-lapping sheets are joined by local fusion at one or more spots by the heat generated by resistance to the flow of electric current through work pieces that are held together under force by two electrodes, one above the other below the two overlapping sheets.

Procedure-

The steps involved in making a spot weld are listed below and shown in figure but before spot welding, one must make sure that

i) The job is clean, i.e. free from grease, dirt, scale, oxide etc.

ii) Electrode tip surface is clean, since it has to conduct the current into the work with as little loss as possible. Very fine emery cloth may be used for routine cleaning.

iii) Water is running through the electrodes in order to
   a) cool the weld
   b) Avoid them from getting overheated and thus damaged.

iv) Proper welding current has been set on the current selector switch.

v) Proper time has been set on the well timer.

Step-I

Electrodes are brought together against the over-lapping work pieces and pressure is applied so that the surfaces of the two work-pieces under the electrodes comes in physical contact after breaking any unwanted film existing on the work-pieces.

Step-II

Welding current is switched on for a definite period of time. The current may be of the order of 3000 to 10000 A for a fraction of second to a few seconds depending upon the nature of material and its thickness. As the current passes through one electrode and work-pieces to the other electrodes, a small area where the work-pieces are in contact is heated. The temperature of this weld zone is approximately 815°C to 930°C.

Step-III

At this stage, the welding current is cut off. Extra electrode force is then applied or the original force is prolonged. This electrode force or pressure forges the weld and holds it together while the metal cools down and gains strength.

Step-IV

The electrode pressure is released to remove the spot welded work-pieces.

<u>Roll Spot And Seam Welding:-</u> When the spot welds on two over-lapping pieces of metal are spaced, the process is known as roll spot welding. If the spot welds are sufficiently made close so that they overlap and make a leak proof seam (i.e., joint), the process is called seam welding. The typical applications of seam welding include sheet metal radiator and drums where both longitudinal and circumferential lap joints are used.

Seam welding is a continuous type spot welding over the two overlapping metal plates or sheets. The work pieces are allowed to pass between two copper wheels or a roll which acts as electrodes. The wheels also apply the pressure on the work pieces. When current s supplied to the electrode high heat is produced on the work pieces, at the same time the work pieces are passed continuously between the rolls and a continuous weld is formed.

The work pieces to be welded are passed between the rotating discs or wheel shaped electrodes (of copper alloy) which are in the form of rollers. These electrodes are not separated after each individual weld as in spot welding, but maintain a continuous pressure on the work. The current passing from roller to roller through the work piece heats up the parts to be joined and the pressure on the roller electrodes forms the weld. The cooling is accomplished by flooding the electrodes and metal pieces with water. This process is best adopted for metal thickness ranging from 0.025 mm to 3 mm. it is used to join tanks, barrels, pressure vessel etc.

Projection Welding:- It is a kind of resistance welding on one side of the work pieces. Small projections are raised on one side using a die and punch. The two work pieces are placed between two copper electrodes. The two electrodes are clamped between fixed and movable arms. When current is passed, heat is produced due to electrical resistance; mechanical pressure is applied by pressing the movable arms. The two plates are joined together at the point of contact.

It is similar to spot welding except that one of the metal pieces to be welded has projections on its surface at the points where the welds are to be made. These projections should extend about 1 mm above the surface to be welded. The projections are readily made with punch presses by embossing. The contact between the two metal pieces to be joined is made at the projections. When the welding current passes through these projections, they are melted and flattened, allowing the two surfaces to come together. The melted projections become the welds.

This process is used for cross-wise welding and for parts where the ridges are produced by machining. It is most suitable for large quantity production. The main advantages of projection welding over spot welding are as follows:

1. It is a quick process and number of welds can be made simultaneously. The ideal number of projections is three and the maximum number of projections which can be used satisfactorily is about six.
2. The welds may be more closely spaced than is possible with spot welding.
3. There is no thickness limitation.
4. The life of the electrodes used is much longer as compared with the life of spot welding electrodes.

Notes: 1:- When two pieces of different metals arc to be welded by projection welding, then the projections should be made on the metal piece with the higher conductivity.

2: When the two metal pieces are of different, thicknesses, the projections should be ms& on the thicker metal piece.

<u>Butt Welding:-</u> A type of resistance welding which produces a butt weld between the ends of two metal rods is known as resistance butt welding.

The butt welding is of the following two types:

(a) Upset butt welding, and (b) Flash butt welding.

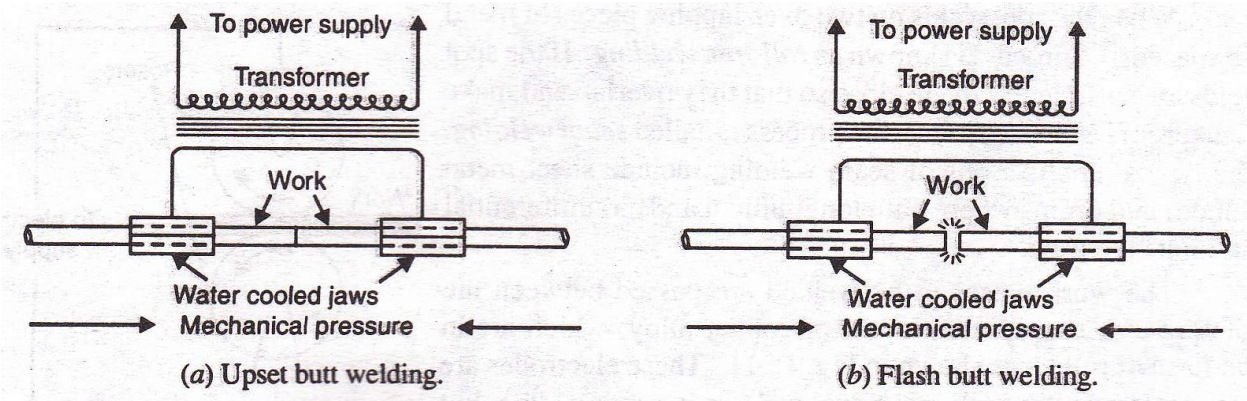

Fig. 15.13. Butt welding.

In upset butt welding, the two parts of metal having the same cross-section are held by two heavy water cooled copper jaws and forced together. The heat is generated in the contact surface by the electrical resistance when a suitable electric current flows across the joint. When the metal at the joint is heated sufficiently, the pressure is applied by the two jaws in order to force the two pieces together. The upset butt welding is especially applied for joining ends to ends of rods, pipes, small structural shapes and many other parts of uniform section.

In flash butt welding, the parts to be welding are clamped in copper jaws of welding machine. The heat required for the welding operation is derived from the arc that occurs in the space between the parts to be joined, in this process, the ends to be welded are pushed together and immediately after contact is made, they are separated by a short distance. In separating, an arc is formed which heats the ends of the pieces to the fusion temperature. After the ends are fused, the current is shut off and the pieces are forced together. In this process, a slight burr is produced when the two sides are forced together, forming what is called a flash (i.e., a ragged line of extruded material which can be machined or ground away). This process is used extensively in the manufacture of steel containers and in the welding of mild steel shanks to high speed steel drills and reamers.

Flash welding:- Flash welding is a resistance welding process wherein coalescence is produced, simultaneously over the entire area of abutting surfaces by the heat obtained from resistance to electric current flow between the two surfaces, and by the application of pressure after heating is substantially completed. Flashing and upsetting are accompanied by expulsion of metal from the joint.

Principle of operation –

The sequence of operations required for flash welding is given below.

i) Flash-butt welds are made on a machine having one stationary and one opposing movable platen, on which are mounted the flash-welding dies or clamps. These clamps securely hold the two work-pieces to be welded while simultaneously serving to conduct the welding current through these work-pieces.

ii) The work-piece held in the movable platen is brought towards the one gripped in the stationary platen until the two come in light contact, and as the welding current(with voltage sufficiently high) is turned on, flashing is established. While incandescent metal particles are being expelled by flashing the movable platen keeps on moving constantly towards the stationary one at a carefully controlled and accelerated rate. As the flashing continues, the ends of the two work-pieces burn off as they reach a higher and higher temperature until finally they attain the welding temperature.

iii) At this stage, the pressure of the moving clamp is quickly and greatly increased to (upset) forge the parts together and expel the molten metal and slag out of the joint thereby making a good solid weld. The metal expelled forms a ragged fin or flash around the joint which is removed later on by cutting or grinding.

iv) The welding current is cut off and the work-pieces are unclamped as the fusion weld cools.

<u>Welding Defects:-</u>

During welding process if proper care is not taken the following defects may arise. They may be because of the faulty technique used by operator or sometimes they are inherent in the Process:

1. Incomplete fusion
2. Slag inclusion or oxides
3. Poor penetration
4. Porosity
5. Cracking
   (a) Hot-cracking

(b) Cold cracking

(1) Incomplete fusion:-

Incomplete fusion results from poor joint preparation improper, cleaning, incorrect welding parameter like welding current. If welding current is lower than the required all the faces or joint would not be sufficiently heated to promote Proper fusion.

(2) Oxides and slag inclusion:-

Oxidation is the number one enemy to welding and they should be removed because they tend to get entrapped in the solidifying metal. Fluxes are after used to remove oxides. Fluxes react with oxides and other impurities and form and slag which being lighter floats on the top of weld pool. However, some timer because of stirring action slag goes into the weld pool and there is not enough time for it to' float. It may get solidified inside the fusion zone and ends up as slag inclusion.

(3) Poor penetration:-

Poor penetration results from too little heat input. Because welding on cool base metal requires low travel speed and as the base metal absorbs heat and temperature rises, speed may be increased. It may be also caused because of the incorrect edge preparation and may lead to cracking.

(4) Porosity:-

It results from oily, wet or dirty base metal and insufficient gas shielding. It is also caused by presence of gases such as hydrogen, oxygen and nitrogen which get entrapped during solidification. Hydrogen is the main cause of porosity in weld. Hydrogen is absorbed by weld pool if an incorrect welding technique is applied.

(5) Cracking:-

Cracking is one of the most serious defects and may occur due to incorrect welding technique or using a filler material having different rate of contraction compared to that of parent metal. It may occur at two stages during the cooling of weld metal.

(a) Hot cracking:-

Hot cracking is influenced by the sulphur and carbon contents of mild steel weld metals. The hot cracking can be avoided by using sufficient manganese. It can also be prevented by preheating the base metal and increasing the cross-sectional area of root weld bead.

(b) Cold cracking:-

Cold cracking occurs at room temperature after the weld is completely cooled and can be seen in heat affected zone. Cold cracking can be reduced by pre and post heating of the weldments and reducing the cooling rates.

TUNGSTEN INERT GAS (TIG) OR GAS TUNGSTEN ARC WELDING (GTAW):-

Definition:- It is an arc welding process wherein coalescence is produced by heating the job with an electric arc struck between a tungsten electrode and the job. A shielding gas (argon, helium, nitrogen, etc.) is used to avoid atmospheric contamination of the molten weld pool. A filler metal may be added, if required.

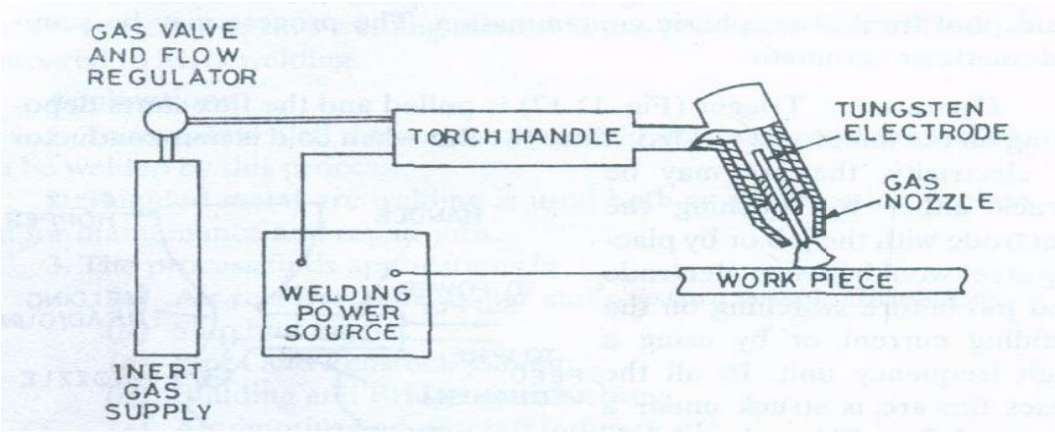

TIG welding equipment

Principle of Operation:-

Welding current, water and inert gas supply are turned on. The arc is struck either by touching the electrode with a scrap tungsten piece or using a high frequency unit. In the first method arc is initially struck on a scrap tungsten piece and then broken by increasing the arc length. This procedure repeated twice or thrice warms up the tungsten electrode. The arc is then struck between the electrode and pre-cleaned job* to be welded. This method avoids breaking electrode tip, job contamination and tungsten loss. In the second method, a high frequency current is superimposed on the welding current. The welding torch (holding the electrode) is brought nearer to the job. When electrode tip reaches within a distance of 3 to 2 mm from the job, a spark jumps across the air gap between the electrode and the job. The air path gets ionized and arc is established.

After striking the arc, it is allowed to impinge on the job and a molten weld pool is created. The welding is started by moving the torch along the joint as in oxy-acetylene welding. At the far end of the job, arc is broken by increasing the arc length. The shielding gas is allowed to impinge on the solidifying weld pool for a few seconds even after the arc is extinguished. This will avoid atmospheric contamination of the weld metal. The welding torch and filler metal are generally kept inclined at angles *of* 70-80° and 10-20° respectively with the flat work-piece. A leftward welding technique may be used. Filler metal, if required, should be added by dipping the filler rod in the weld pool. When doing so, the tungsten electrode should be taken a little away from weld pool. During welding operation, alternatively filler rod and tungsten

electrode will withdraw and come closer to the weld pool. This procedure will avoid contamination front the tungsten electrode. Introducing and withdrawing of filler rod into the molten weld pool may disturb the inert gas shielding, entrain air, oxidize filler rod end and thus contaminate the weld pool. In order to avoid these problems, it is preferred to keep the heated end of the filler rod always within the inert gas shield even when withdrawing the same from weld pool during welding.

Equipment:-

(a) Welding Torch, tungsten electrode and filler metal.
(b) Welding power source, high frequency unit, DC suppressor unit and cables.
(c) Inert gas cylinder, pressure regulator and flow meter.
(d) Cooling water supply.
(e) Water and gas solenoid valves.

Welding torch which may be air or water-cooled, energizes the tungsten electrode held in a collect and feeds shielding gas to the weld puddle. When welding above 150 amps, generally a water-cooled torch is preferred.

The electrode material may be tungsten, or tungsten alloy, *i.e.,* thoriated tungsten or zirconiated tungsten. Alloy-tungsten electrodes possess higher current carrying capacity, high resistance to contamination and produce a steadier arc, as compared to pure tungsten electrodes. When welding copper in nitrogen atmosphere, alloy-tungsten electrodes are preferred because nitrogen attacks liquid (pure) tungsten; but, for the welding of aluminium under argon shielding, pure tungsten electrode is more suitable. Fig. 11.20 shows the electrode geometry for AC and DC welding.

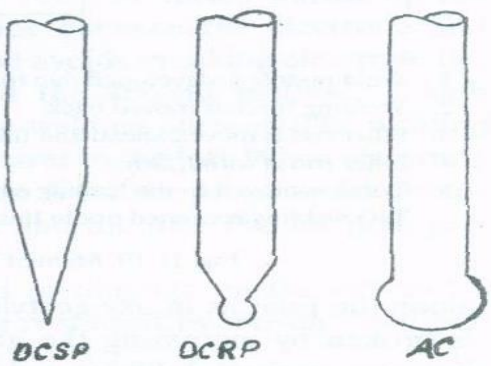

Fig. 11.20. Geometry of tungsten electrodes

A filler rod is generally used when welding thicker pieces with edges prepared. Preferably the filler rod should possess the similar chemical composition and be of the diameter same as the thickness of the work piece to be welded. Filler metals up

to 4.5 mm diameter in the form of straight lengths or coils are available for TIG welding of different metals and alloys.

Both DC and AC welding machines with good current control can be used for TIG welding. DC is preferred for welding of stainless steel, nickel, copper and copper alloys whereas DCRP or AC is used for welding magnesium, aluminium and their alloys. Reverse polarity of current removes oxide film on aluminium and magnesium.

When using AC a *high frequency unit* is employed to keep the arc ignited and stabilized. A *DC suppressor unit* is incorporated in the electrical circuit to balance the current wave. A DC suppressor unit reduces the effect of DC component of current which comes into operation due to the fact that arc voltage is more when electrode is positive, than when it is negative. In the absence of a DC suppressor unit, arc may blow and behave erratically and the transformer may become saturated, over-heated and derated.

Inert gases ordinarily used in TIG welding are

(i) Argon
(ii) Helium
(iii) Argon-helium mixtures
(iv) Argon-oxygen mixtures ,
(v) Argon-hydrogen mixtures.

Pressure regulator and flowmeter are used respectively to step down the inert gas pressure from cylinder pressure (approx. 140 kg/cm^2) to working pressure (1-1.5 kg/cm^2) and to feed the same at a definite flow rate (4.12 1pm) to the welding torch. For welding mild steel, aluminium and its alloys, copper, nickel and their alloys and stainless steel, generally argon, helium or a mixture of argon and helium can be used. Argon is preferred for welding bronzes and argon or helium can be employed for the welding of titanium and magnesium.

Gas and water solenoid valves if incorporated in the system, control the respective flows, *i.e.,* they start the gas and water flow before the arc ignites and stop the same after the welding is over, tungsten electrode has cooled and weld metal has solidified.

Base Metals welded

(i) Carbon and alloy steels, (ii) Stainless steels,
(iii) Heat resisting alloys, *(iv)* Refractory metals,
(v) Aluminium alloys, *(vi)* Copper alloys,
(vii) Magnesium alloys (VIII) Nickel alloys, etc.

TIG welding is well adapted to weld thicknesses up to 6 mm.

<u>Joint Design:-</u>

— *Bull, Lap, Comer, Edge,* and *T* Joint — are all used in TIG welding. •

— A square groove but joint is used for smaller thicknesses.
— A single V-groove butt joint is required for base metal thicknesses between 4.8 and 9.6 mm.
The included angle of V- groove is 60° and root face 3.2 to 6.4 mm.
— A double V-groove butt joint is generally used on base metals thicker than 12.5 mm. .
— A corner joint is used for fabricating boxlike structures.
— An edge joint does not usually require the addition of filler metal.

METAL INERT GAS (MIG) OR GAS METAL ARC WELDING (GMAW):-

Definition:-

It is an arc welding process wherein coalescence is produced by heating the job with an electric arc established between a continuously fed metal electrode and the job. No flux is used but the arc and molten metal are shielded by an inert gas, which may be argon, helium, carbon dioxide or a gas mixture.

Principle of Operation (Semi-automatic process):-

Before igniting the arc, gas and water flow is checked. Proper current and wire feed speed is set and the electrical connections are ensured. The arc is struck by any one of the two methods. *In the first method* current and shielding gas flow is switched on and the electrode is scratched against the job as usual practice for striking the arc. *In the second method,* electrode is made to touch the job, is retracted and then moved forward to carry out welding; but before striking the arc, shielding gas, water and current is switched on. About 15 mm length of the electrode is projected from the torch before striking the arc. During welding, torch remains about 10-12 mm away from the job and arc length is kept between 1.5 to 4 mm. Arc length is maintained constant by using the principles of *self-adjusted arc,* and *self controlled arc* in semi-automatic (manually operated) and automatic welding sets respectively.

Equipment:-

(a) Welding power source and cables.
(b) Welding torch and wire electrode coiled on a spool.
(c) Wire feed mechanism and controls consisting of a pair of driving rolls, electric motor, etc.
(d) Shielding gas cylinder, pressure regulator and flow meter.
(e) Controls for switching on and off the current, electrode wire and inert gas.

Power sources possessing flat or drooping characteristics and rated at 400 Amps can be employed for MIG welding. Flat characteristic welding sources ensure a more constant arc length. The major types of power sources are DC generator or AC transformer with rectifier. DC electrode negative produces weld with shallow

penetration and thus can be used on thinner sections. DC electrode positive is preferred (when welding aluminium and magnesium) for its better arc cleaning action. DCRP also provides deeper penetration. AC is generally not recommended because of unequal burn off rates during negative and positive half cycles.
The welding torch energies the electrode, feeds the electrode and the shielding gas. The torch may be air-cooled or water-cooled. Torches working above 200 Amps are generally water-cooled. The torch may have a straight or bent nozzle fitted on the end (Fig.). Bent nozzles can be used for welding complicated shapes and intricate joints.

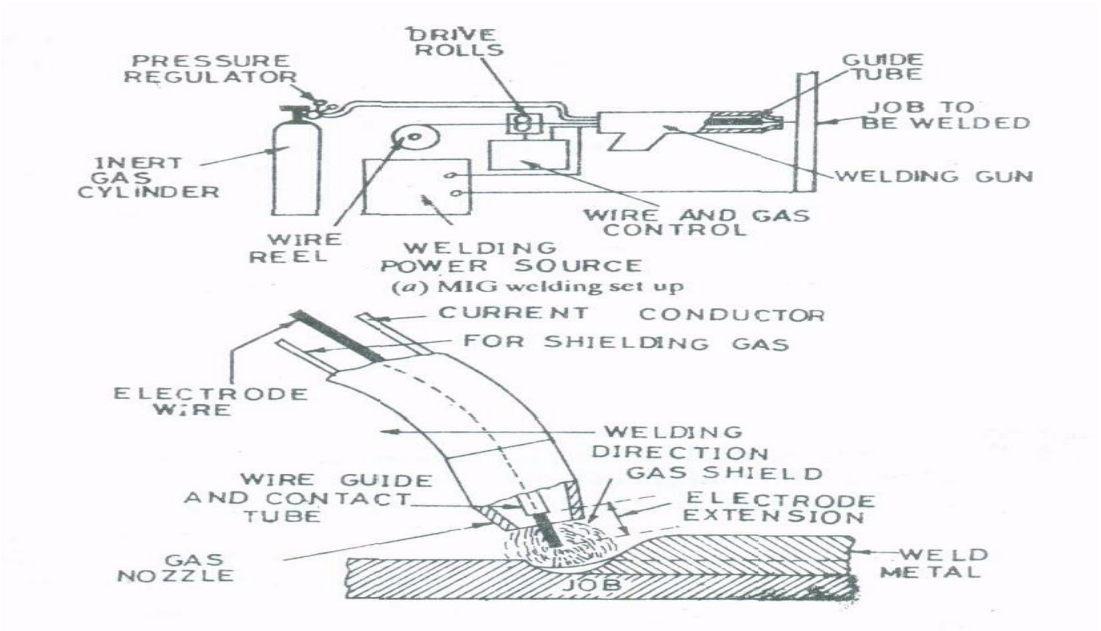

MIG welding torches

Wire feed mechanism may deliver electrode to the torch at a constant speed or at different speeds. The wire spool, in manually operated units, is mounted elsewhere to facilitate welding over a bigger area whereas in automatic machines, the wire spool is fixed on the same carriage over which the torch is mounted. The different diameters of the electrode wire are 0.8, 1.2, 1.6 mm, etc. A standard wire spool may have from 1 to 15 kgs of wire. Steel electrodes are generally copper coated. As far as possible, the chemical composition of the work piece and that of the electrode should be similar; of course, there may be the addition of deoxidizers. Electrodes are available for welding aluminium, magnesium, nickel, their alloys, carbon, low alloy and stainless steels, etc.

The function of a **shielding gas** is to protect the molten metal and the electrode end against atmospheric contamination. A number of shielding gases and gas mixtures, like argon (for welding Al, Mg, Cu, Ni, Ti), helium (for welding Al, Mg,

Cu), carbon dioxide (for welding mild steel), nitrogen (for welding copper), argon 4-(1-5%) Oxygen (for welding Al, low alloy and carbon steels, stainless steels), argon + CO_2 (for welding mild steel, low alloy and stainless steel), argon + helium + CO_2 (for welding austenitic stainless steels), argon + helium (for welding Al, Cu, Ni and their alloys), have been used in MIG welding. Helium and CO_2 help increasing penetration whereas argon reduces spatter loss.

Solenoid valves and relays may be incorporated in the system to put on and. off gas, water and wire feed mechanism.

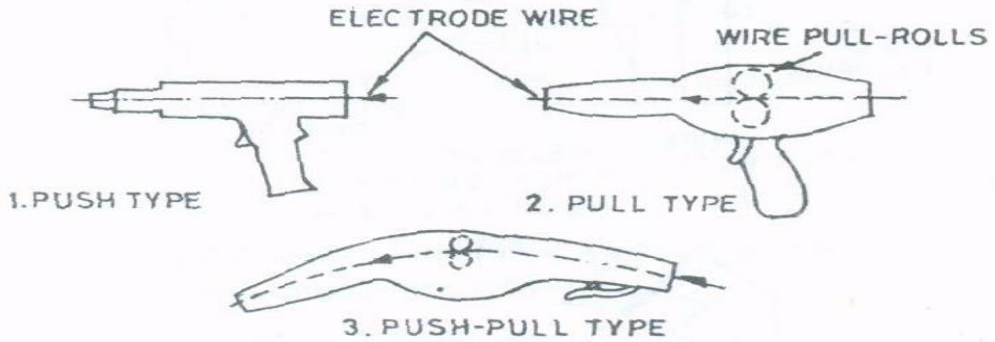

Metals Welded.

Base metals commonly welded by MIG welding are:

(i) Carbon and low alloy steels,
(ii) Stainless steels,
(iii) Heat resisting alloys,
(iv) Aluminium and its alloys,
(v) Copper and its alloys (other than high zinc alloys), and
(vi) Magnesium alloys.

Joint Design.

MIG welding is applicable to the following types of joints:

(i) Butt,
(ii) Lap,
(iii) T,
(iv) Corner,
(v) Edge.

CASTING

Casting is the process of producing metal or alloys component parts of desired shape by pouring the molten metal or alloys in a prepared mould of that shape and then allowing the metal or alloys to cool and solidify.

Classification of Casting

Metal Casting Process

Expandable mold casting | **Non expandable mold casting**

Expandable mold casting

i) sand casting
ii) shell mold casting
iii) investment casting
iv) carbon dioxide mold casting

Non expandable mold casting

i) permanent mold casting
ii) die casting
iii) centrifugal casting

Procedural steps of sand casting :-

- Make the pattern out of wood, metal or plastic.
- In case of sand casting select, test and prepare the necessary sand mixture for mould and core making.
- With the help of pattern prepare the mould and necessary cores.
- Melt the metal or alloy to be cast.
- Pour the molten metal or alloy into the mould and remove casting from the mould after the metal solidify.
- Clean and finishing the casting.
- Test and inspect the casting.
- Remove the defects, if any.
- Relief the casting stress by heat treatment.
- Again inspect the casting.
- The casting is ready for shipping.

Foundry Tools and Equipments:-

The foundry tools and equipments are divided in to the following five groups:-

i. Hand Tools,
ii. Molding boxes(Flasks),
iii. Molding Machines,
iv. Melting Equipments, and
v. Pouring Equipments.
vi.

Type Of molding Sands With Their Composition & Property & Specify Different Binding Materials:-

1. Green sand molding:-It is the most widely used molding process. The green sand used for molding consists of silica sand, clay, water and other additives. Typical green sand mixture contains 10 to 15% clay binder, 4 to 6% water and remaining silica sand. The green mixture is prepaid and the mold (cope and drag) is made by packing the same around the pattern. Cope and drag are assembled and molten metal is poured while is made by packing the same around the pattern. Green and molding is preferred for making small and medium sized castings.

2. Dry sand molding:-Dry molding sand differs from the green molding sand in the sense that it contains binders (like clay, Bentonites, molasses etc) which harden when the mold is heated and dried. A typical dry sand mixture (for making non-ferrous castings) consists of floor sand 40%, new silica sand 30% coal dust 20% and betonies 10%.A dry sand mold is prepaid in the same manner as a green sand mold however it is baked at 300 to 700 degree F for 8 to 48 hours depending upon binders used and the amount of sand surface to be dried.

3. Skin-dried molding:-A skin-dried mold is intermediate between green sand mold and dry sand mold. Whereas a dry sand mold has its entire surfaces dried, a skin dried mold has its (6 to 25mm) skin dried. Moisture from the skin is removed either by storing the mold for some times or with the help of gas torches. Skin dried molding possesses partially the advantages of both green and dry sand molding. Large molds and molds for pit molding are skin- dried.

The molding sand is the principal element used in the foundry shop for molding. Principal ingredients of molding sands are silica and grain, clay, moisture and miscall anions materials.

4. Loam molding:- The mould made with loam sand is called loam mould. The loam sand also contains fire clay. The loam moulds are similar to pit moulds and are used for large work where the pattern required will be too expensive to make. The mould is first built up with bricks or large iron parts. These parts are then plastered with a thick loam sand mixture consisting of silica (22 volumes). Clay (5 volumes), coke (10

%) and moisture (18 – 20 volumes). The shape of the mould is obtained by either with sweep or skeleton pattern.

5. Metal molding:- The mould made of metal is called metal mould. The metal moulds are used in casting of low melting temperature alloys. Since the casting produced by metal moulds has a smooth finish, therefore much of the machine work is eliminated.

Molding sands:-

Molding sand should possess certain desirable properties and they are:

- **Flow ability**
  Flow ability is the ability of the molding sand to get compacted to a uniform density. Flow ability assists molding sand to flow and pack all-around the pattern and take up the required shape.
- **Green Strength**
  it is the strength of the sand in the green or moist state. A mold having adequate green collapse, even after the pattern has been removed from the molding box. Green strength helps in making and handling the molds.
- **Dry strength**
  It is the strength of the molding sand in the dry condition. A mold may either intentionally be dried, skin dried or a green sand mold may lose its moisture and get dried while waiting for getting poured or when it comes in contact with the molten metal being poured.dry and strength is related to grain size, binder and water content.
- **Hot Strength**
  lt is strength of the sand (of mold cavity) above 212 degree F or 100 degree C in the absence of adequate hot strength, the mold may enlarge, break, erode or get cracked.
- **Permeability or Porosity**
  While being poured, the molten metal comes in contact with green sand mold cavity and cores made up of core sand. The moisture, binders (organic compounds) and additives present in a, produce steam and other gases, Though much of these gases escape through vents and open feeder heads yet a good amount same tend to pass through the pore spaces of the molding sand .Thus to provide a path for free escape of the gases, the molding sand should be permeable or porous. Sands which are coarse or have rounded grains exhibit more permeability .defects like surface blows, gas holes, mold blast etc may be experienced.

- **Refractoriness**

  It is the ability of molding sand to withstand high temperatures (experienced during pouring) without fusion. Cracking, buckling or scabbing, experiencing any major physical change.
- **Adhesiveness**

  It is the property of molding sand owing to which ,it sticks with the walls of molding boxes , sticks with gaggers, and thus make it possible to mold cope and drag.
- **Collapsibility**

  Collapsibility is that property of the molding sand or mold, automatically get collapsed after casting solidifies and break down in knock out and clearing operations.
- **Fineness**

  Finer sand molds resist metal penetration and produce smooth casting surfaces. Fineness and permeability are in conflict with each other and hence they must be balanced for optimum result. Fineness permeability both the properties of molding sand can by maintained by using mold coating on highly permeable mold cavity walls.
- **Bench Life**

  It is the ability of the molding sand retain its properties during storage or while satang (i.e in case of any delay)
- **Coefficient of expansion**

  Molding sand should possess low coefficient of expansion.
- **Durability**

  The molding sand should possess the capacity to withstand repeated cycle of heating and cooling during casting operations.
- **Molding sand should be chemically immune to molten metals.**
- **Molding sand should be reusable.**
- **It should be easy to prepare and control the molding sand.**

The molding sand may be classified into:

- **Natural sand:-** The natural sand is one which content sufficient clay. The natural sands have advantages of simplicity in their preparation, handling and use.
- **Synthetic sand:-** The synthetic sand one which is artificially compound by missing sand grains and selected type of clay. These sands have lower cost in larger volume.

- **Special sand:-** The special sand content mixture in organic compounds. This sand cost more and produces better cast surface and better high temperature stability.

The moulding sands are classified as:

(i)Green sand: The sand in its natural state or moist state is called green sand. It also called temperature sand. It is mixture of silica sand with 20 to 30 percent clay, having total amount of water from 6 to 10%. The mould prepared with this sand are called green sand mould. It is used for small size casting of ferrous and non ferrous metals.

(ii) Dry sand: The green sand moulds when dried before pouring the molten metal are called dry sand moulds .The sand is dry sand. The dry sand moulds have greater strength. These are used for large and heavy casting.

(iii) Loam sand: A mixture of 50% sand grain and 50% clay is called loam sand. It is used for large grey iron casting.

(iv) Facing sand: Sand use for facing of mould is called facing sand. It is a mixture of silica and clay, without addition of used sand. The thickness of layer of facing sand in a mould ranges from 20 to 30 mm and is used directly next to the surface of the pattern. It posses high strength and refractoriness.

(v) Backing sand: Sand used to backup the facing sand not used next to the pattern is called backing sand. This sand which has been repeatedly used, may be employed for this purpose. It is also known as black sand.

(vi) System sand: Sand employed in mechanical sand preparation and handling system is called system sand.

(vi) Parting sand: Sand employed on the faces of the pattern before molding is called parting sand. The function of the parting sand is that when the pattern is withdrawn, the face of the mould impression is damaged by adhesion of grain of sand. It consists of dried silica sand, sea sand, burnt sand etc.

(viii) Core sand: Sand used for the preparation of cores is called core sand. It sometimes called oil sand. It is the silica sand mixed with linseed oil or any other oil as binder.

(ix) Molasses sand: Sand which carries molasses as a binder is called molasses sand. It is used for making moulds of small castings of intricate shapes.

Sources:-

River Beds, Sea, Lakes, Deserts etc.

Ingredients:-

- Refractory sand grains.
- Binders.
- Water.
- Additives.

Binding Materials:-

i. As compared to molding sands binders are less refractory.
ii. Binders produced cohesion between the molding sand grains in the green or dry state.
iii. Binders give strength to the molding sand so that it can retain its shape as mold cavity.
iv. Increasing binder contain to a limit increases green compression strength; after which green compression strength remains practically unchanged with further increase in binder contain .
v. Clay binders are most commonly used for bonding molding sands. Clay binders can be classified as :
   a. Fire Clay.
   b. Bentonite
   c. Sodium Montmorillonite
   d. Calcium Montmorillonite.
   e. Illite.
   f. Limonite.
   g. Kaolinite.
   h. Clay is inorganic binders.
vi. The best clay is one which imparts that the optimum combination of bonding properties, moisture, life and cost of producing the required casting.
vii. A clay binder which produces a thin and adhesive film around the molding sand grains and thus makes the bond stronger is the best.

Pattern And Various Pattern Allowances:-

Pattern may be defined as a model or replica of desired casting which when moulding in sand forms an impression or cavity called mould. A pattern is a model or replica of the object to be cast.

Functions:-

- A pattern prepares a mould cavity for the purpose of making a casting.
- A pattern may contain projections known as core prints if the casting requires a core and need to be made hollow.
- Runners, Gates, Risers (used for introducing and feeding molten metal to the mould cavity) may form a part of the pattern.
- Pattern establishes the parting line and parting surface in the mould.
- Patterns properly made and having a finished and smooth surface reduces casting defects.

For selecting a particular kind of pattern for making a casting, one may consider the following points:

- Quantity of castings to be produced.
- The size and complexity of the shape of the casting to be produced.
- Types of molding methods to be used.
- Problems associated with the molding operation such as withdrawing the pattern from the mold, etc.
- Other difficulties resulting from the poor casting design or pattern or pattern design.

Material For Making Pattern:-

The common materials used for making pattern are Wood, metal, plastic, wax, plaster, etc.

Types of Pattern:-

- **One piece or solid pattern:-** A single piece or solid pattern is a compact form made from wood. It has no joints, partings or loose pieces in its construction. It has usually one board surface or flat surface that serves as parting surfaces in the mould. This type of pattern is use for a limited number of casting, because most of the moulding operations like parting surface formation, cutting of gating system, providing runners and risers, withdrawal of pattern etc. is done by hand.
- **Split pattern:-** Most of the patterns are not made in a single piece because of the difficulties encountered in moulding, in order to eliminate these difficulties some patterns are made into two or more pieces. This pattern made from wood, consisting of two pieces is also called two piece patterns. One half of the pattern rests in the lower part of the moulding box known as drag and other half in the upper part of the moulding box known as cope. The line of separation of the parts is called parting line.
- **Loose piece pattern:-**A pattern has been made with projections or overhanging part, these projections make the removal of the pattern. Therefore such projections are made in loose pieces and are fastened loosely to the main pattern by means of wooden or wire dowel pin. These patterns are made from wood or metals.
- **Match plate pattern:-**The match plates are used in machine moulding for quantity production of casting. A single pattern or a number of single piece pattern mounted on a match plate, when a cope & drag portion of the split pattern are mounted on opposite side of the wooden plate, the pattern is called match plate pattern. The gates,

runners & risers are permanently fastened to the drag side of plate in their correct position in order to form a complete match plate pattern.

- **Cope and Drag pattern:-**When very large casting are to be made, the complete mould becomes too heavy to be handled by a single operator, in order to omit this problem the cope & drag pattern is used. Cope & drag pattern is a simple two pattern split in a convenient joint line. One part is moulded in a cope and the other part in a drag of the moulding box.
- **Sweep pattern:-**The moulds of large size and symmetrical in shape particularly of circular section can be easily prepared by using a sweep instead of a full pattern. It is not considered as a true pattern when compared with others. A sweep is a template of wood or other material which has the shape corresponding to the shape and size of casting. It is arranged to rotate about a central axis by mounting it on a spindle. The sand is rammed in place with a cavity of approximately similar shape d size to that of the required mould. Now by revolving the sweep, the desired shape of the mould is generated. The sweep and the spindle are then removed and the hole in the centre is filled up.
- **Gated pattern:-**Gated pattern is used for mass production of small casting. When a number of small pattern are placed in a single mould, then each pattern may be provided with a gate with it. It consists of pieces of wood or metal fixed to the pattern to form the runner and rising channel in the mould. In this way, full supply of the molten metal flows into every part of the mould.
- **Skeleton pattern:-**When a few and large sized casting are required, it is not advisable to use a large solid pattern of that size, as it will require a lot of wood and time to make a full pattern. In such cases, a skeleton pattern in the hollow form, consisting of a wooden frame and strip is used. The frame work is filled and rammed with loam sand and a strickle board is used to scrap the excess sand out of the spaces between the ribs so that the surface is even with the outside of the pattern. The skeleton pattern is made in two halves, one for the cope and the other for the drag. After taking the impression, the cope and the drag are assembled together with the core in position to form the complete mould. The skeleton patterns are used for casting of hollow cast iron pipe, bends, valve bodies, boxes, etc.
- **Segmental Pattern:-**The segmental patterns are also known as part patterns. These patterns are sections of a pattern so arranged as to

form a complete mould by being moved to from each section of the mould. These patterns are usually applied to circular work such as rings, wheel rims, gears etc.

When a mould is to be made using a segmental pattern, a vertical spindle is firmly fixed in the centre of a drag flask. The mould bottom is rammed and swept level. Now the segmental pattern is fastened to the spindle. The moulding sand is rammed between the outside of the pattern and the flask and on the inside except at the ends of the pattern. After ramming one segment, the next segment is rammed, and so on until entire perimeter of the mould is completed.

- **Follow board pattern:-**A follow board pattern is used for solid patterns having an irregular parting line. It may be used with either single or multiple gated pattern. The patterns requiring follow boards and the boards routed out so that the patterns rests in it up to the parting line and this board then acts as a moulding board for the first moulding operation. The follow board supports the mouldind cavity with moulding sand at the bottom side of moulding box.
- **Shell pattern:-**The shell pattern is used largely for drainage fittings and pipe works. This type of pattern is usually made of metal mounted on a plate and parted along the centre line, the two sections being accurately doweled together. The short bends are usually moulded and cast in pairs. The shell pattern is a hollow construction like shell. The outside shape is used as a pattern to make the mould while the inside is used as a core box for making cores.

Various Pattern Allowances:-

A pattern is always larger in size as compared to the final casting because it carries certain allowances due to metallurgical and mechanical reasons for example, shrinkage allowance is the result of metallurgical phenomenon where as machining , draft, Shake and other allowances are on the patterns because of mechanical reasons .

The various pattern allowances are:-

i. Shrinkage or contraction allowances.
ii. Machining or finish allowances.
iii. Draft or tapper allowances.
iv. Distortion or camber allowances.
v. Shake or rapping allowances.

- **Shrinkage or contraction allowances:-**

Almost all cast metals shrink or contract volumetrically after solidification and therefore the pattern to obtain a particular sized casting is made oversize by an amount equal to that of shrinkage or contraction.

Different metal shrink at different rates because shrinkage is the property of the cast metal or alloy.

The metal shrinkage depends upon:

i. The cast metal or alloy.
ii. Pouring temperature of the metal or alloy.
iii. Casting Dimensions.
iv. Casting design and aspects.
v. Molding condition.
vi. Cast iron poured at higher temperatures will shrink more than that poured at lower temperature.
vii. Harder grades of cast iron shrink more than the softer grades of cast iron.

- **Machining or finish allowances:-**

A casting is given allowances for machining, because:

i. Casting gets oxidized in the mold and during the heat treatment; scales; etc., thus form need to be removed.
ii. It is intended to remove surface roughness and other imperfections from the casting.
iii. It is requiring achieving exact casting dimensions.
iv. Surface finish is required in casting.
v. The above factor necessitates the provision of extra metal on the casting or the machining.

How much extra metal should be provided, depends upon the factors listed below:

i. Nature of metal i.e., ferrous and nonferrous ones do not.
ii. Size and shape of the casting. Longer casting tends to warp and need more metal to be added to ensure that after machining the casting will be alright.
iii. The types of machining operation to be employed for cleaning the casting .Grinding removes much lesser metal as compare to turning.
iv. Molding process employed. Die casting produces parts which need little machining whereas parts sand-cast, require more machining allowances.

v. Number of cut to be taken. Machining allowances is directly proportional to the number of cuts required for finishing the casting.
vi. The degree of surface finish desired on the cast part.

- **Draft or tapper allowances:-**

It is given to all surfaces perpendicular to the parting line.

Draft allowance is given so that the pattern can be easily removed from the molding material tightly packed around it without damaging the mold cavity

The amount of taper depends upon

i. Shape and size (length) of the pattern in the direction in contact with the mold cavity.
ii. Molding method.
iii. Mold materials.
iv. Draft allowance is imparted on internal as well as external surface; of course it is more on internal surfaces.

Taper on external surface = 10 to 25 mm/meter.

Taper on internal surface = 40 to 65 mm/meter.

- **Distortion or camber allowances:-**

A casting will distort or warp if:

i. It is of irregular shape ,
ii. All its parts do not shrink uniformly i.e., some parts shrink while others are restricted from doing so ,
iii. It is U or V-shaped ,
iv. It has long , rangy arms as those of the propeller strut for the ship ,
v. It is a long flat casting ,
vi. The arms possess unequal thickness ,
vii. One portion of the casting cools at a faster rate as compared to the other, etc.

After distortion the arms of a U-shaped casting will tend to draw together. Distortion can be practically eliminated by providing an allowance and constructing the pattern initially distorted i.e., outsize in the opposite direction so that the casting after cooling neutralizes the initial distortion given on the pattern and acquires the correct shape (i.e., a U-shaped casting will tend to have both its)

The amount of distortion allowance may vary from 2 to 20 mm depending upon the size, shape and material of casting.

- **Shake or rapping allowances:-**

i. A pattern is shaken or rapped by striking the same with a wooden piece from side to side. This is done so that the pattern is loosened a little in the mold cavity and can be easily removed.

ii. In turn, therefore, rapping enlarges the mold cavity which results in bigger sized casting.
iii. Hence, a negative allowance is normally provided on the pattern i.e., the pattern dimensions are kept similar in order to compensate the enlargement of the mold cavity due to rapping.
iv. Shake allowances is normally provided only to large castings because it is negligible in case of small casting and is thus ignored.
v. The magnitude of shake allowance can be reduced by increasing the tapper.
vi. The amount of rapping varies with the molder doing the same and, therefore, the foundry supervisor must be consulted while fixing this allowance.

Construction Of Core & Core Boxes:-

Core:-

- A core may be defined as a sand shape or form which makes the contour of a casting for which no provision has been made in the pattern for molding.
- Core is an obstruction which when positioned in the mold, naturally doesn't permit the molten poured metal to fill up the shape occupied by the core. In this way the core produces hollow casting.
- Cores are required to create the recesses, undercuts and interior cavities that are often a part of casting.
- Cores may be made up of sand, metals, plaster or ceramics.
- Cores re used to:
- Forms the air space between the cooling fins of an air cooled engine cylinder.
- Make the water cooling chamber in internal combustion engines.

Different Functions of Cores:-

- For hollow casting, cores provide the means of forming the main internal cavities.
- Cores may form a part of green sand mold.
- Cores may provide external undercut features.
- Cores may be employed for improving the mold surface.
- Cores may be inserted to achieve deep recesses in the casting.
- Cores may be used to strengthen the molds.

Types of cores :-

The various types of cores depending upon their position are:-

- **Horizontal core: -** These cores are placed horizontally in the prints at the parting line of the mould, such that one half remains in the cope and the other half in the drag. This type of core is often used in a split or two piece patterns.
- **Vertical core:-** These cores are placed vertically in the mould. The core print is provided on the cope and drag side of pattern. Generally the upper end of this core is tapered.
- **Balanced core:-** These are similar to horizontal core but these cores supported at one end only. Therefore the core print should be made up sufficient length in order to prevent the core from falling in the mould. The balanced core are used to produce hollow cavities, blind holes along a horizontal axis in a casting.
- **Drop core:-** The drop core are also known as wing core are used when a hole or cavity to cored is not in-lined with the parting line, i.e. it is either above or below the parting line.
- **Cover core:-** The cover cores are used when the entire pattern is rammed in the drag and the core is required to be supported from the top of the mould. This type of core usually requires a hole through the upper part to permit the metal to reach the mould.

Core Boxes:-

- A core box is basically a pattern for making cores.
- Core boxes are employed for ramming cores in them.
- Core boxes impart the desired shape to the core sand.
- Core boxes range from simple wooden structure to precision metal assemblies which process a long life under exacting condition.

Types of core boxes:-

A few commonly used types of core boxes are:

- **Half Core Box:-**It can make cylindrical Cores. A half core box is most common type of core box used for preparing the two identical half of a symmetrical core. Half portion of the core is made in the core box, at one time. The two half are then pasted together to form a complete core.
- **Slab Or Dump Core Box:-** It employed for making rectangular, square or trapezoidal cores. A slab core box is similar to half core box but the core produced by this core box do not required pasting and they are

complete by themselves. If the core produced is in the shape of slab then it is slab core box. If the core produced is in the form of half round then it is called dump core box.

- **Split Core Box:-**Unlike dump and half core box, a split core box is in two parts. The two portions of the split core box can be aligned and temporarily joined together with the help of dowels. When join the two halves of a split core box depict the full core cavity. Rammed core can be removed by splitting the core box again into two halves.
- **Left And Right Hand Core Box:-** The right and left hand core box is used when the core are not symmetrical about the centre lines and the two halves of the core are made in the same core box and are not identical. They are used to make cores for fro producing pipe bends. Half of the pipe bend core is made in each core box. Two Halves of pipe bend thus rammed are baked and then cemented together to make the full core.
- **Strickle Core Box:-** A strickle core box is used when the core is required to have an irregular shape which can't be easily rammed by other method. The desired irregular shape is achieved by striking of the core from the top of the core box with a piece of wood called a strickle board. The strickle is called to correspond exactly to the contour of the required core.
- **Gang Core Box:-** Gang core box is used when large number of small sized core are to be prepared. In this type of core box, It contains a number of core cavities so that more than one core can be rammed at one time.
- **Loose Piece Core Box:-**It resembles half core box; but unlike half core box, loose piece core box can produce two halves of a core, which may be neither identical in size nor in shape. His is achieved by inserting loose wooden pieces in the core whenever necessary. The insertion of loose pieces in the core box will naturally alter the symmetry of the rammed half core. After they are baked the two un identical halves of the core can be pasted together.

Construction of core:-

The cores are mostly made of a core sand mixture consisting of sand grains and organic binders which provide green strength and collapsibility. The green strength is required so that core sand may be molded to shape for making. The simplest core sand mixture commonly used comprises sand, 1% core oil, 1% cereal and 2.5 to 6 percent water.

- **Mixing Of Core sand:-**

i. The first consideration in making the dry sand cores is to mix and prepare the sand properly in order to obtain best cores.
ii. If the binder is dry, it should be thoroughly mixed with the sand before any moisture is added.
iii. The mixture must be homogeneous so that the core will be of uniform strength throughout.

- **Ramming Of Core Sand:-**

i. The core is usually made in core boxes.
ii. The core box is filled with core sand, rammed and struck off.
iii. The rammer may be done manually or with machine.

- **Venting Of Core:-**

i. Since the cores are often surrounded by hot metal after the casting is poured, Therefore the cores are required to be sufficiently permeable to allow core gases to pass through the core and into the mold or atmosphere.
ii. The vent holes are provided for the escape of gases.
iii. These vent holes are usually made with wire.

- **Reinforcing Of Core:-**

i. Some cores required internal rain forcing to prevent breakage or shifting when the casting is poured.
ii. Wires being used to support the barrel of the cylinder core.
iii. The wire should be surrounded with the sand to keep them from fusing to the casting and making their removal difficult.

- **Baking Of Core :-**

i. The core is transferred to a cope plate or drier for baking.
ii. This is done by placing the plate over the core box.
iii. The core which is to be baked on a core plate, must have a flat surface resting on it.
iv. The core with flat surface must be supported on a core driver until they are baked.
v. The core baked at temperature up to about 260^0c to develop strength obtainable from the organic binders in the core sands.
vi. The under baked cores may collapse too soon and break or erode before the casting is solidified.

- **Cleaning Of Core:-**

i. The cleaning of cores consists of trimming, brushing, coating and mudding.

ii. The trimming is done to remove fins arising from loose joints or loose pieces in the core box or other sand projections by rubbing them or filling with an emery stone.
iii. The brushing of cores is performed with a brush to remove loose sand.
iv. The coating of cores is done with refractory or protective materials which improves their resistance to molten metal or produce a better casting.
v. The muddling is a localized coating to make the core completely smooth.
vi. This is avoided by drying in a core oven for 20 minutes to 1 hour.

- **Sizing Of Cores:-**

i. The sizing usually involves gauging the core to see if its size is correct and then removing the material.
ii. The gauges may be used to check critical dimensions.
iii. The cores may be inserted in a gauging fixture which will check a number of dimensions at once.
iv. Some cores are made slightly over size and ground to correct height.
v. Joining Of Cores:-
vi. Sometimes core are made of two or more pieces before they can used.
vii. They are held together by pasting, bolting.
viii. The pasting is commonly used on small work. A core paste, usually a mixture of talc, dextrin, flour, water or other ingredients, is apply to the surfaces to be joined .
ix. The bolting is useful in large core work. The recessed holes are left in the cores so that they may be bolted together. The bolt and nut heads are covered with a core plug or mud.

Construction And Working Of Cupola Furnace:-

Cupola is a furnace which is most widely used to melt grey cast iron, nodular cast iron and some malleable cast iron. Cupola is simple in construction, economical to operate and melts iron continuously with a minimum of maintenance.

Constructional Details:-

Cupola is essentially a refractory lined vertical cylinder open at both its top and bottom. The inside diameter of cupola ranges from few inches to 7 feet. Small size has been built for demonstration and experimental purposes. Cupola consists of drop door at the bottom. After closing drop door a proper sand bed can be prepared. This sand bed provides a necessary refractory bottom for the molten metal and the coke. Immediately above the sand bed is the metal tapping hole which is initially closed with clay till molten metal is ready for tapping. Above the metal tap hole is the slag

hole through which slag generated during the melting process is tapped. Above the slag hole is wind box. Air from suitable blower comes through the blast pipe and enters in wind box.

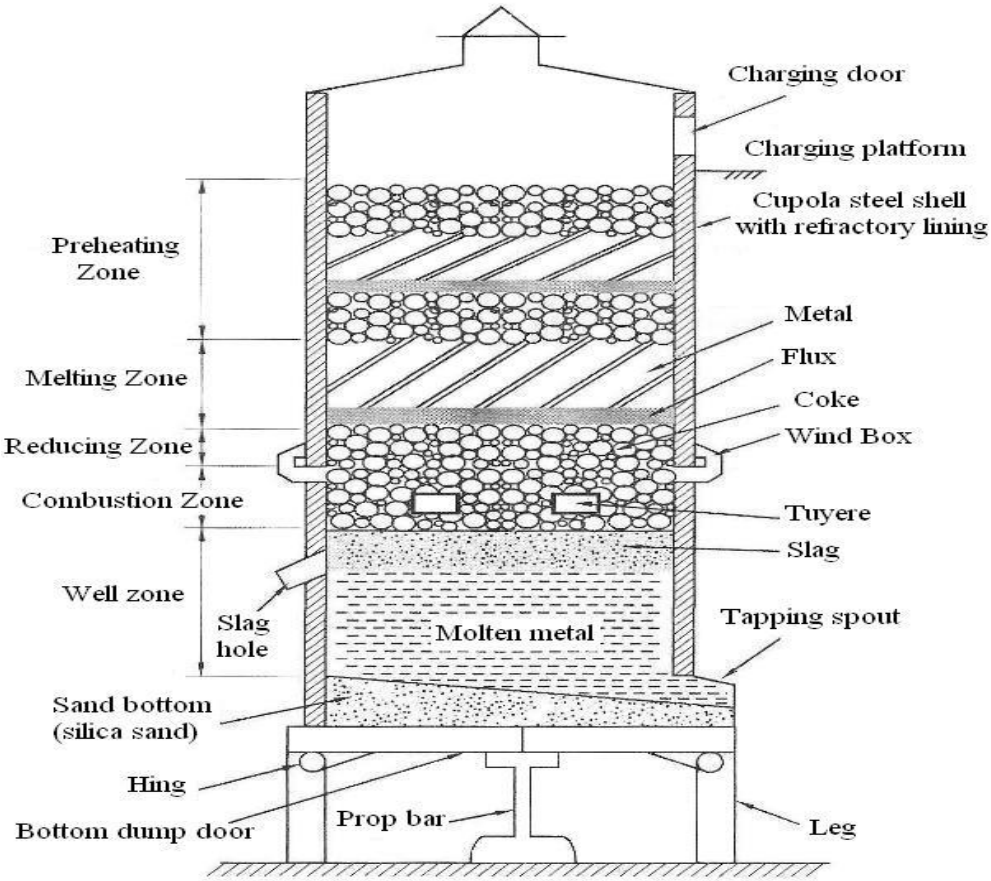

Cupola Furnace

Cupola Operation:- There are six steps in cupola furnace operation.

i) Preparation of cupola
ii) Lightening of cupola
iii) Charging of cupola
iv) Melting
v) Tapping of slag and molten metal through slag and tapping hole
vi) Drop down the bottom part of cupola

While starting cupola a bottom is first prepared by closing the drop door and ramming the molding sands which slops gently towards tap hole. Then a coke bed of suitable height is prepared above the sand bottom. While igniting, first the coke bed is ignited through tap hole or any other hole near its bottom. After coke bed is properly ignited, layers of coke, iron charge and lime stone or fluxes are alternatively fed into cupola through charging door maintaining the necessary proportion and rate of charging. Then the air blast is turned on and combustion occurs rapidly within 5 to 10 minutes. Molten metal is collected near the tap hole. When enough molten metal

is collected in the well of cupola the slag is drained of through slag hole before opening the tap hole. The molten metal is collected in ladles and transported to the moulds in which it is to be poured.

The charge needed to produce cast iron consists of pit iron, cast iron scrap. Steel scrap is also used when alloy cast iron is needed. The fluxes are added in the charge to remove oxides and other impurities present. The flux most commonly used is limestone ($CaCO_3$). The flux is expected to react with oxides and from compounds which have low melting point and also lighter than molten metal. As a result molten slag tends to float on the metal pool and thus can be very easily separated.

Zones in cupola furnace:-

i) Combustion zone
ii) Reduction zone
iii) Melting zone
iv) Preheating zone
v) Stack zone.

Construction And Working Of Induction Furnace:-

The furnace contains a refractory line crucible surrounded by water cooled copper coils. The furnace walls on the principle of transformer. Water coils and copper coils are primary and the secondary is the metal charge. When A.C. is passed to the copper tubing a magnetic field is set up. This magnetic field induced eddy current in the crucible charge which melt the metals. If ferrous metal show magnetic property the loss due to hysteresis produces extra heat. Very high temperature can be obtained by this method of melting, the only limitation being the ability of the furnace lining to with stand the temperature developed.

The charge ratio in steel=40 to 60%.
In pig iron=4 to 7%.
Rest= Other.

Induction furnaces are of two types:-

i. Core less and high frequency induction furnace.
ii. Channel furnace or low frequency induction furnace.

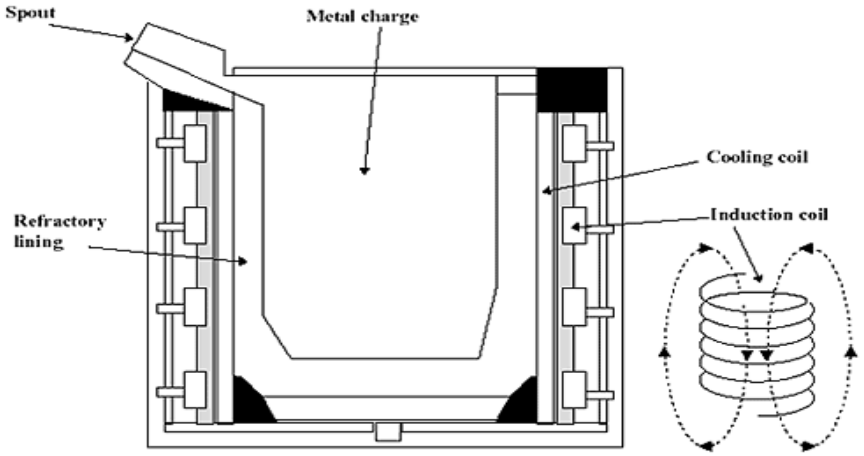

High frequency induction furnace:-

In this case water cooled copper coils consisting the primary coil of transformer, completely surrounding the crucibles. A high frequency current is passed through the coil. A heavier secondary current is induced in the charge consisting the secondary coil. The resistance of metal charge will cause it to heat up to the desired temperature.

Low frequency induction furnace:-

In this types coil surrounded only a small person of crucible and the A.C. passed through the coil is of low frequency.

The induction furnaces are exploited to metal steel, iron, brash and aluminum base alloys.

Induction furnace is suitable especially for smaller quantities like 50 kg to 10 tons. The furnace doesn't required electrodes, it prevents combustion of metals and the process is control.

Working principle:-

The principle of an induction furnace resembles that of a transformer. It has a primary coil about which an alternating magnetic field is set up with magnetic lines of force of a definite density when an alternating current is passed through the coil. The magnetic field induces alternating eddy currents in the secondary circuit which comprises a crucible containing the metal charge. The eddy currents heat up and melt the metal.

An induction crucible furnace comprises a refractory crucible and a coli or inductor. The letter is made of copper tubing through which cooling water circulates and is arranged inside the refractory crucible. An insulating lining is provided between the coil and e crucible. The metal to be melted is charged into the crucible where it is melted down by the heavy secondary currents induced by the magnetic flux of the primary coil. The crucible can be tilted on

horizontal trunions to pour the molten metal. Induction furnaces operate on an alternating current with a frequency of 500-2500 Hertz.

Induction furnaces are most often employed in making high alloy steels and special purpose alloys. An advantage of these furnaces is that they don't require electrodes. This prevents carburization of the metal and simplifies control of the process.

Construction And Working Of Crucible Furnace:-

In crucible furnace, the metal charge is placed and melted in a crucible.

A crucible is made up of silicon carbide, graphite or other refractory metals and it can withstands the high temperature. Crucible is available in different sizes ranging from No.1 to No.400. Each number indicates the amount of metal which can be handled conveniently by that crucible. A crucible furnace consists of a steel shell provided with refractory lining inside.

A crucible furnace has the following advantages:

a. Low initial cost.
b. Easy to operate.
c. Low cost of fuel, etc.

A crucible furnace may be of the following type:-

i. Pit Crucible furnace.
ii. Crucible furnace of bale-out type.
iii. Crucible furnace of tilting type.
iv. Gas and oil fired crucible furnace.
v. Coke fired crucible furnace.

- **Pit crucible furnace:-**

i. A pit furnace has crucibles placed in a pit below the ground level.
ii. It may be coke, oil or gas fired furnace, but usually it is fired with coke.
iii. Enough coke is packed round and above the crucible pot so as to melt and superheat the metal charge.
iv. Since molten metal does not come in contact with fuel, there is no pick up of elements by the metal from the coke and a very little compositional change occurs in the metal charge.
v. Coke fired pit furnace is employed for melting cast iron and non-ferrous metals and alloys.
vi. The metal charge consists of pig iron, foundry returns and broken castings.
vii. The coke bed is formed, ignited and allowed to burn. Once it reaches the state of maximum combustion, coke from the centre of coke bed is

shifted towards sides to make space for the crucible containing the metal charge.

viii. The crucible is surrounded from all sides with the coke and its top is covered (with a lid).

ix. A blower is used to provide the necessary air for the combustion of coke while the charge is melting.

x. As the charge melts and attains the required pouring temperature, crucible is brought out of the furnace with the help of tongs etc. and is taken to the place of pouring.

- **Crucible Furnace Of Bale-out Type:-**
  i. Unlike pit furnace, crucible of a bale out type furnace rests above the ground level.
  ii. Such furnaces are normally fired by oil or gas.
  iii. Bale-out type furnaces are made cylindrical so that the flame may sweep around and uniformly heat the crucible.
  iv. The forced draft is provided usually by a fan.
- **Crucible furnace of tilting type:-**
  i. As compared to stationary furnaces, tilting type furnaces are preferred where large amounts of metal are melted.
  ii. In stationary furnace, the crucible can be taken out from the furnace and move to the place of pouring whereas in tilting type of furnace the crucible is permanently cemented in place.
  iii. Against stationary furnace of capacities up to above 100kg, tilting furnace may have capacities up to 500kg of metal or more.
  iv. A tilting furnace consists of an outer shell having a refractory lining inside.
  v. A tilting furnace may be coke, oil or gas fired, employing forced draught for combustion purposes.
  vi. A tilting crucible furnace unlike pit furnace is above the floor level. It is mounted on two pedestals and is rotated either by a geared hand wheel or power.

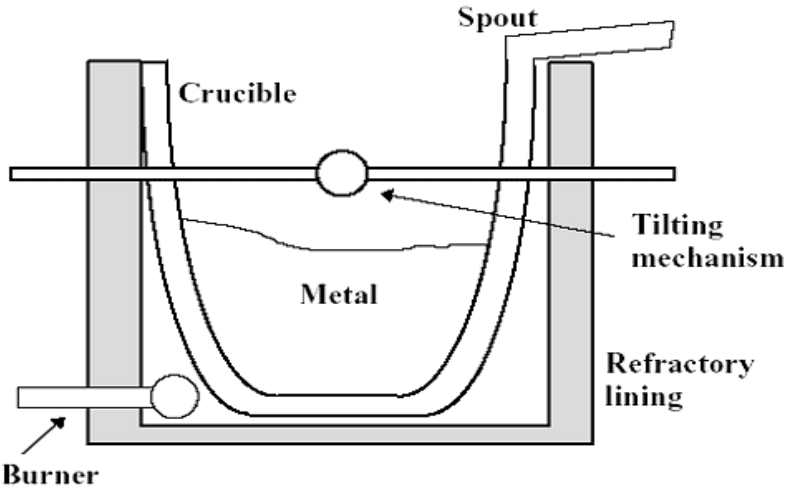

- **Stationary Gas Or Oil-Fire Crucible Furnace:-**
  i. It has an outer shell having a refractory lining inside.
  ii. As explained under tilting furnace, the flame swirls around the outside of the crucible containing the charge and melts the same.

- **Stationary Coke Fired Furnace:-**
  i. It differs from pit furnace in the sense that it is above the floor level.
  ii. In operation it resembles coke fired pit furnace.

Defects in casting:-

The defects in a casting may be due to pattern and molding box equipment, molding sand, cores, gating system or molten metal. Some of the defects and their reasons are discussed below:

- **Mould shift**:- It results in a mismatching of the top and bottom parts of a casting , usually at the parting line . it occurs due to following reasons :

i. Misalignment of pattern parts,
ii. due to worn or damaged patterns, and
iii. Misalignment of molding box or flask equipment.

This defect can be prevented by ensuring proper alignment of the pattern, on pattern plates etc.

- **Core shift:-**It is an abnormal variation of the dimensions which are dependent on core position. It is caused by

i. Misalignment of cores in assembling cored-moulds,
ii. Undersized or oversized core prints, and
iii. By using incorrect size of chaplet.

This defect can be eliminated by providing the core at the proper place and must be gripped properly in the sand.

- **Swell:-** It is an enlargement of the mould cavity by molten metal pressure resulting in localized or general enlargement of the casting.

It is due to following reasons:

i. Insufficient ramming of sand,
ii. Insufficient weighting of the mold during casting, and
iii. Pouring of molten metal too rapidly or too hard.

The swells are avoided by the proper ramming of sand and uniform flow of molten metal in to the mold.

- **Fins and Flash:-** These are thin projections of metal not intended as a part of casting . These usually occur at the parting line of mold or core sections. These are caused by:

i. Excessive rapping of the pattern before it is withdrawn from the mould.
ii. Insufficient weight on the top part of the mold, and
iii. Loose clamping of the mold.

In order to avoid this defect, sufficient weight should be placed on the top part of the mold so that the two parts fit tightly together.

- **Sand Wash:-** It is usually occurs near the in gates as rough lumps on the surface of a casting . The sand that has been washed away appears on the upper surfaces of the casting as rough holes or depressions. This is due to the following reasons:

i. Soft ramming of sand.
ii. Weak sand,
iii. Poor pattern, and
iv. Insufficient draft.

This defect is avoided by the proper ramming of sands.

- **Shrinkage:-** It is a crack in the casting or dishing on the surface of casting which results from unequal contraction of the metal during solidification . This is due to following reasons:

i. Improper location and size of gates and runners.
ii. Inadequate risers,
iii. Lack of directional solidification,
iv. Incorrect metal composition, and
v. Incorrect pouring temperatures.

This defect can be eliminated by the use of feeders and chills at proper locations to promote directional solidification.

- **Hot Tear:-** It is an internal or external ragged discontinuity in the metal casting resulting from hindered contraction occurring just after the metal has solidified . This defect is due to the following reasons:

i. Abrupt changes in section, inadequate filleting of inside corners, and improper placement of chills.
ii. Poor collapsibility of mold and core materials which will place extra stress on certain details.
iii. Improper pouring temperature.

In order to eliminate this defect, abrupt changes in section should be avoided. The pouring temperature should be correct and there should be even rate of cooling.

- **Sand Blow Or Blow Hole :-** It is excessively smooth depression on the outer surface of a casting. This defect is also called blow holes. This defect is due to the following reasons:

i. High moisture content in molding sand,
ii. Low Permeability of sand,
iii. Hard ramming of sand,
iv. Defective gating system, and
v. Improper Venting Of sands.

The defect can be removed by proper venting, completely drying up the mould, selecting the proper sand with required permeability and proper in-gate system for the flow of molten metal.

- **Core Blow:-** It is an excessively smooth depression on the inner surface of a cored cavity or a gas pocket immediately above a cored cavity . This defect is caused by using insufficient baked cores.

Thus the cores should be sufficiently baked before using.

- **Honeycombing Or Slag Holes:-** These are smooth depression on the upper surfaces of the casting. The usually occur near the in gates. This defect is due to imperfect skimming of the metal or due to poor metal.

This defect can be avoided by preventing the slag from entering along with the molten metal.

- **Scabs:-** These are patches of sand on the upper surface of casting. This defect is due to the following reasons:

i. Uneven ramming of sand, and
ii. Slow or intermittent running of metal.

The proper ramming of sand and uniform flow of the molten metal in to the mould can eliminate this defect. Another methods of remove this defect is to mix additives such as wood flour, sea coal or dextrin into the sand .

- **<u>Cold Shuts And Misruns:-</u>** These occur when the mould cavity is not completely fitted and an incomplete casting results . This defect is due to the following reasons:

i. Too small gates,
ii. Too many restrictions in the gating system,
iii. Pouring head is too low,
iv. Facility Venting of the moulds, and
v. Metal lacking in fluidity.

In order to eliminate these defects, the casting should be designed keeping in mind the fundamental principles of gating and risering. Then thin selection should be preheated and the molten metal should be poured at the correct temperature.

- **<u>Poured Short:-</u>** It occurs when the mold cavity is not completely filled because of insufficient metal. It is due to the following reasons:

i. Interruptions during pouring operation, and
ii. Insufficient metal in the ladles being used to pour the metal.

In order to avoid this defect, the ladle should have sufficient molten metal at the correct temperature.

- **<u>Metal Penetration:-</u>** It occurs when the alloy being cast tends to penetrate into sand grains and causes a fused aggregate of metal and sand on the surface of the casting. It is due to the following reasons:

i. Soft rammed sand,
ii. Molding sand and core sand being too coarse,
iii. Improper use of mould and core washes will cause penetration,
iv. Excessive metal temperature or increased fluidity of metal.

These defects can be eliminated by removing the above mentioned reasons.

- **<u>Run-outs And Bust-outs:-</u>** These permit drainage of the metal from the cavity and result in incomplete casting . This defect is due to the following reasons:

i. A pattern that is too large for a given flask or pattern placed too close to the flask edge results in a weak spot and cause run-out.
ii. The match plate surface that are out of parallel or uneven results in a poorly formed parting line and cause a run out.
iii. Inadequate mould weights or clamps will permit the cope to fit which results a run-out.
iv. Improper sealing of mould joints causes run-out.
v. Excessive pouring pressures may cause run-out.

The corrective measures taken in respect of the above reasons will prevents the defects.

- **<u>Rough Surface Finish:-</u>** It is merely a lack of sufficient smoothness in the casting . It is due to the following reasons:

i. Soft ramming of sand,
ii. Coarser Sand,
iii. Hard pouring or too high metal fluidity
iv. Improper use of mould and core washes often promote rough casting surface.

This defect can be avoided by using a proper mould and ramming of sand.

- **<u>Crush:-</u>** It is an irregularly shaped cavity or projection on the castings caused by the displacement of the sand at the mould joints or core prints, which usually occurs when the mold is being closed. It occurs due to the following reasons:

i. Badly made mould joints,
ii. Excessive pressure on the sand surface,
iii. Too large core or too small core prints.

The defect can be eliminated by taking proper care in placing the cope over the drag. The sand in the cope should be rammed properly.

- **<u>Warpage:-</u>**It is un intentional and undesirable deformation that occurs during or after solidification . It is due to the following reasons:

i. Continuous large flat surface on castings, indicating a poor design ,
ii. No directional solidification of casting.

The defect can be eliminated by modifying the casting design and proper directional solidification.

SPECIAL CASTINGS:-

- Sand casting is not suitable for economical in many application where the special casting process would be more appropriate.

TYPES OF SPECIAL CASTING METHODS:-

- Die casting.
- Investment casting.
- Centrifugal casting

DIE CASTING:-

- Die casting involves the preparation of components by injecting molten metal a in to metallic die by means of pouring the molten metal under gravity or by external pressure.
- The process of forcing the molten metal into the metallic mould (die) cavity under pressure and allowing it to solidify.

- Pressure is generally obtained by hydraulically or Pneumatically.
- The range of the pressure is (70 -5000) Kg/cm2
- The range of the pressure will be maintained during the solidification of casting.
- In this type of casting the liquid metal will be injected into the die.

DIE CASTING MACHINE:-

There are two types of die casting machine.

- Hot chamber die casting machine.
- Cold chamber die casting machine

FUNCTION OF DIE CASTING MACHINE:-

- holding two dies halves firmly together
- closing the die
- Injecting the molten metal in to die.
- opening the die.
- Injecting the casting out of the die.

HOT CHAMBER DIE CASTING PROCESS:-

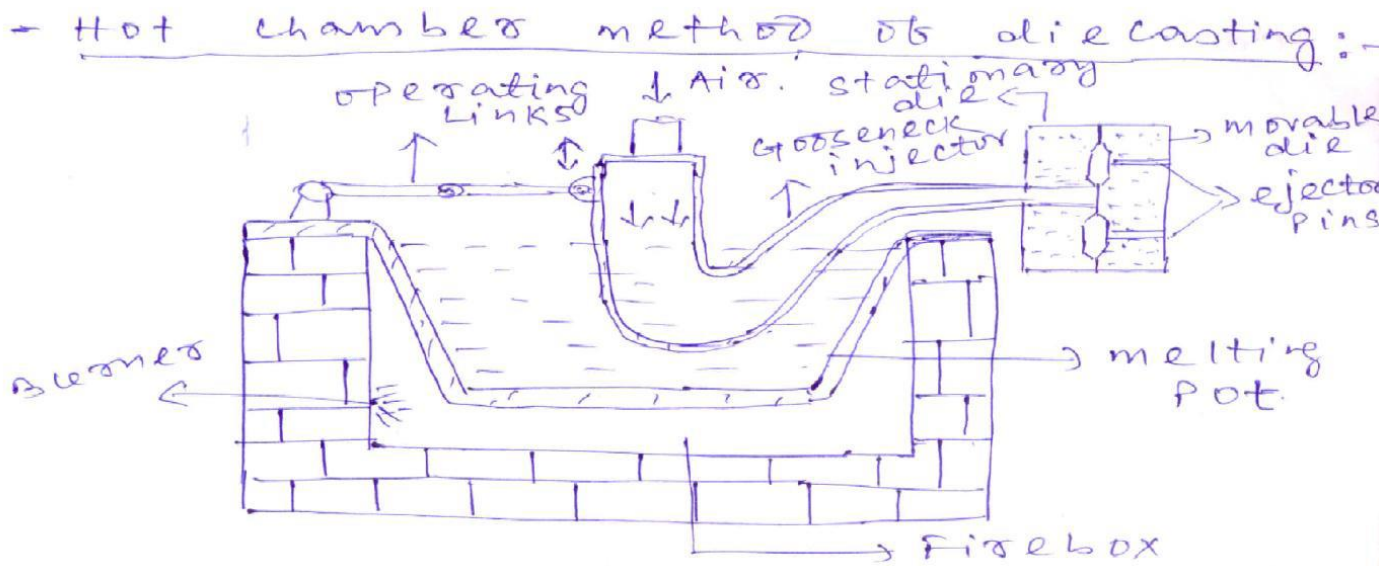

In hot chamber machine the melting unit constitutes an integral part of the process. The injection chamber is immersed in the molten metal at all times. At first the metal is melted in melting pot. After the metal reaches the molten state, the injection chamber is operated by air pressure which forces the metal into the die to complete the casting. The air pressure is maintained till the solidification of casting. When the solidification of the casting is completed the movable die will be opened. The die is having two halves. One half is stationary die and another half is movable die. Stationary is fixed one and movable die can be opened and closed. After opening of the movable the casting is removed by the help of ejector pins.

WORKING:-

- The hot chamber die casting machine of the submerged type.
- The molten metal is forced in the die cavity at pressure from 7 to 14. The pressure may be obtained by the application of compressed air, or by a hydraulically operated plunger.
- In the first method, the goose neck is lowered into the molten metal for filling it. It is then raised and connected to the die neck.
- A suitable mechanism is provided to raise and lower the goose neck.
- The compressed air at a pressure of about 2.5 to 5 MPa is now injected into the goose neck to force the molten metal into the die.
- In the second method , the plunger acts insides a cylinder formed at the end of the goose neck, which is immersed in a pot of molten metal.
- A port is provided rear the top of the cylinder to allow the entry of the molten metal.
- The downward stroke of the plunger pushes the molten metal through the goose neck into the die.

Advantages –

- - Simple in constriction
- - Operation is simple.
- - It requires less space

Disadvantages–

- Production rate is lower.
- Compressed air does not produce pressure on molten metal.
- Life and efficiencies are less.

APPLICATION:-

- The hot chamber die casting machine is used for casting zinc, tin , lead and other low melting alloys.

COLD CHAMBER DIE CASTING PROCESS:-

The molten metal is poured into the cold chamber and this molten metal is forced hydraulically into the die is known as cold chamber method of die casting.

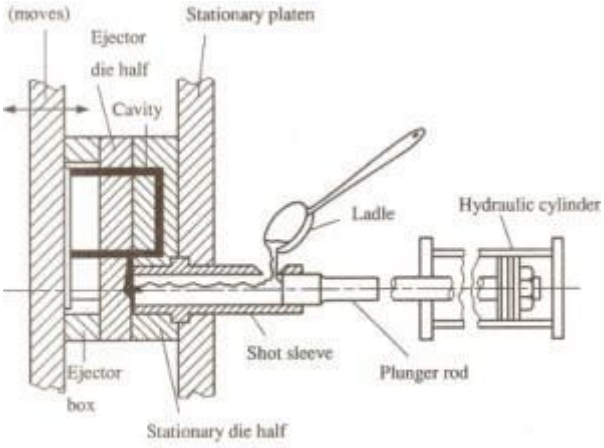

Fig. 3-13 A typical cold-chamber die-casting machine

Process:- The metal is melted in a melting pot. In this method the melting pot is separated from cold chamber machine. After the metal reaches into molten state, the molten metal is poured into ladle. From the ladle the molten metal is poured into the cold chamber after the die is closed and all cores are locked in position. The molten metal is entered into the die by the help of hydraulic ram. The pressure required to force the metal into the die is of the order of (200-2000) kg/cm2 and hence high squeezing action is exerted on the metal while it solidifies. Once the casting has solidified, the movable half of the die opens. Cores are withdrawn, ram moves to the backward and the ejector is advanced to force the casting out of the die half.

CONSTRUCTION AND WORKING :-

- In cold chamber die casting machine, the melting unit is usually separate and molten metal is transferred to injection mechanism by ladle.
- The pressure on the casting metal in cold chamber die casting machine may vary from 21 to 210MPa and in some `cases may reach 700MPa.
- The greater pressures are required for semi molten alloys to compensate for reduced fluidity resulting from low pouring temperatures.
- This process is used for casting aluminium, magnesium, copper base alloys and other high melting alloys.
- The cold chamber die casting machine consists of a pressure chamber of cylindrical shape fitted with a piston or ram that is usually operated by hydraulic pressure .
- A measured quantity of molten metal is brought in ladle from the melting pot to a chamber and forced into the closed die sections by applying hydraulic pressure upon the piston.

The complete cycle is completed in the following four steps.

- The metal is loaded in the chamber.
- The plunger forces the metal into the die cavity.
- After the metal solidifies, the die is opened .
- The casting together with the slag of the excess metal, is ejected from the die.

ADVANTAGES:-

- The rapid economical production of large quantities of identical parts can be achieved.
- The parts having smooth surfaces and close dimensional tolerances may be produced very little machining is required.
- The parts having thin and complex shapes can be casted accurately and easily.
- The die casting requires less floor area than is required by other casting process.
- The casting produced by die casting process are less defective, owing to increased casting soundness.
- The rapid cooling rate produces high strength and quality in many alloys.
- The inserts, if required , can be casted easily in desired places.
- The die retains its trueness and life for longer periods. For example, the life of a die for zinc base castings is up to one million casting , for copper base alloys up to 45000 castings, and for aluminium base alloys up to 50000 casting.

DISADVANTAGES:-

- The cost of equipment and die is high.
- here is a limited range of non-ferrous alloys which can be used for die castings.
- The die castings are limited in size
- .It requires special skill in maintenance.

APPLICATION:-

- This process is used for casting aluminium, magnesium, copper base alloys and other high melting alloys.

CENTRIFUGAL CASTING:-

- A casting process in which molten metal is poured and allowed to solidify while the mold is revolving, is called centrifugal process.
- The castings produced under this centrifugal force are called centrifugal castings.
- This is a process where the mould is rotated rapidly about its central axis as the metal is poured in to it. Because of the centrifugal force, a continuous pressure will be acting on the metal as it solidifies.

- The lighter slag, oxides and other being lighter, gets separated from the metal and segregate towards the centre .

TYPES OF CENTRIFUGAL CASTINGS:-

- True centrifugal casting
- Semi centrifugal casting
- centrifuging.

TRUE CENTRIFUGAL CASTING:-

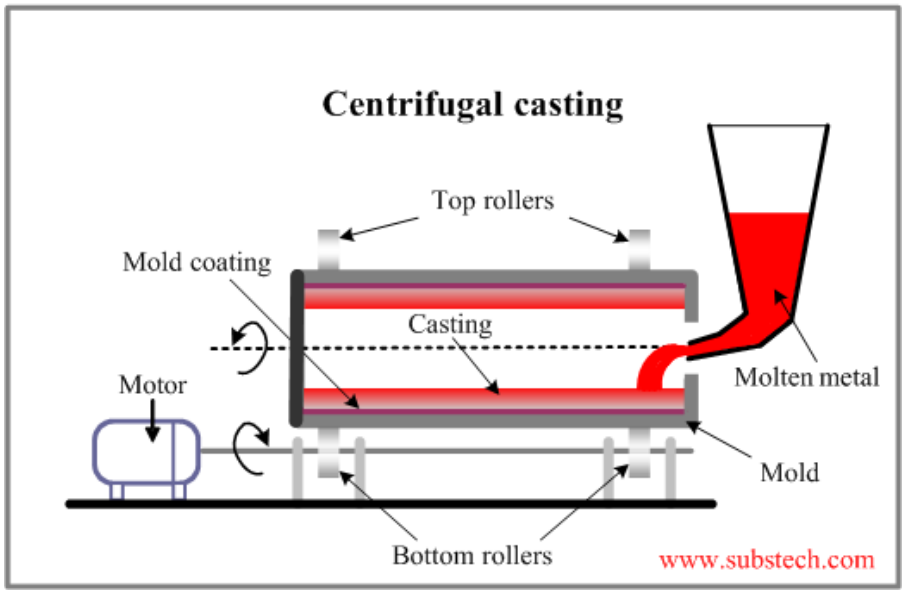

In utilizes the forces generated by the centrifugal action to distribute the molten metal in the rotating mould.

- Centrifugal force play a major role in shaping and feeding of the casting.
- Mould is rotated about its own axis at a predetermined speed.
- Moulds may be rotated about its horizontal axis or vertical axis.
- Moulds for longer parts may be rotated about its horizontal axis.
- Moulds for smaller parts may be rotated about its vertical axis.
- The molten metal for the cast part is introduced to the mould from an external source by the help of a pouring spout. The liquid metal flows down into the rotating mould.
- The metal casting will harden as the mould continuous to rotate.
- By the help of the pipe puller the casting can be extracted from the mould.
- The forces play a major role for the solidification of casting.
- Due to the greater force in outer region of the rim that portion will be denser.

- All the impurities will remain in less denser region of metal casting, closer to the centre of the axis of rotation.
- Impurities are solid inclusions and trapped air.
- The impurities will be removed by the machining process.

CONSTRUCTION AND WORKING :-

- This process is especially employed for casting articles of symmetrical shape e.g , cast iron pipes, sleeves, steel gun barrels and other castings of cylindrical from.
- In this process, the mould is made of metal and lined with refractory material or sand. the molten metal is poured by ladle into the cavity of rapidly rotating mould.
- The centrifugal force directs the fluid metal to the inner surface of the mould with considerable pressure where solidification occurs forming hollow castings .
- The outside of mould is covered by water bath for quick cooling of metal.

ADVANTAGES:-

- The main advantages of a true centrifugal casting process are:
    - It is a quick and economical than other methods
    - .It eliminates the use of risers, feed heads, cores etc.
    - The ferrous and non-ferrous metal can be casted by this process.
    - The castings produced by this process have dense and fined grained structure with all impurities forced back to the centre where they can be frequently machined out .
    - No use of sprues, risers or other gating systems.
    - Good surface finish
    - Quality castings with good dimensional accuracy can be produced.
    - Material of high density and with few impurities is produced in the outer regions of cylindrical parts.
    - Large metal casting 10ft in diameter, and 50ft long can be produced.
    - High melting point materials iron, steel can be cast.
    - Core is not required.

Disadvantages:-

- All alloys cannot be cast.

- Small items cannot be cast by this process.

Applications:-

Manufacturing of various tubes and pipes such as sewage pipes, gas pipes, water supply lines, rings, bushing, the liner for engine cylinder, brake drums, street lamp posts

Semi centrifugal Casting:-

- The molten material for the metal casting is poured into a pouring basin and is distributed through a central sprue to the areas of the mould. The forces generated by the rotation of the mould ensure the distribution of molten material to all regions of the casting.
- As the metal casting solidifies in a rotating mould the forces constantly push the material out from the central sprue.

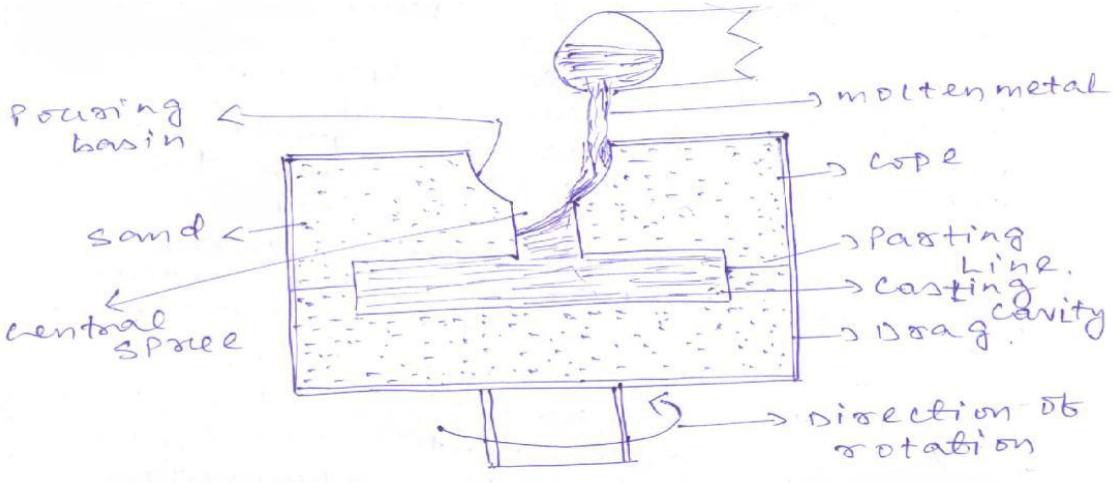

CENTRIFUGING:-

- In order to obtain higher metal pressure during solidification, when casting shapes are not axisymmetrical, the centrifuging process is used.
- The casting of irregular shape can be produced by this method and a large number of small size casting can be produced at one time.
- Centrifuging casting is the third main branch of centrifugal casting process used for industrial manufacture of cast parts.

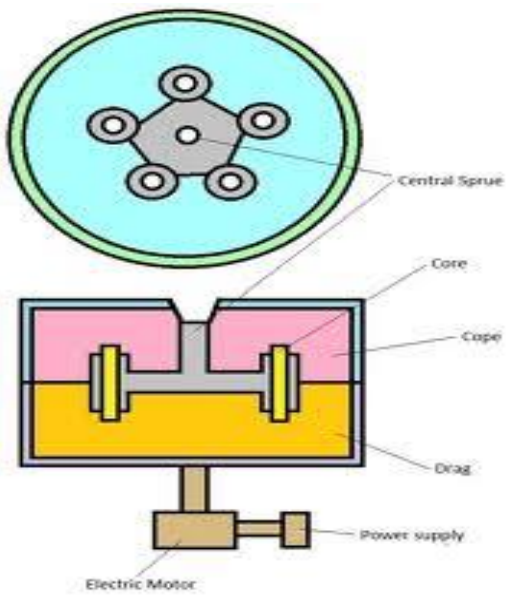

In centrifuging casting moulds are arranged around the central sprue.

- These moulds contain all the necessary geometry for the cast part. Runners travel from the central sprue to the mould entrances.

- The molten material is introduced into the central sprue. The entire system is rotated about its axis with the central sprue at the centre of rotation. When an object is rotated, forces are produced that act directly away from the centre of the axis of rotation.

- The molten material moves into the moulds from the centre through the runners. When the correct amount of molten metal to manufacture the casting is poured and distributed completely into the moulds, the apparatus will continue to rotate as solidification is occurring.

- During the solidification of the casting the moulds will be rotated. The forces acting on the material farther from the centre are greater than the forces, those are acting on the material closer to the centre.

- The material is dense at the outer region and the material is less denser at the area closer of the centre of rotation.

- The impurities such as inclusions and trapped air will be deposited at the less denser region.

- The impurities can be removed by the help of machining process.

WORKING:-

- In this process a number of small mould cavities are made symmetrically around a common central sprue and then metal is fed to them by radial gates.
- In this case, the mould cavities are not rotated about their own axis, but they are rotated about central sprue which act as the axis of rotation.
- Since the centrifugal force used to fill the mould cavities is not same for all the castings, there fore it is not purely centrifugal process.

Advantages:-

- Cast parts with thin walled sections can be manufactured.

- High density, high mechanical strength and fine grained structure can be produced.

- Desired shape can be manufactured.

- Great surface finish can be achieved.

Disadvantages:-

- All alloys cannot be cast.

- Small items can be produced

INVESTMENT CASTING:-

It is also known as lost wax process or precisin casting. The casting produced by this method are within very close tolerances and do not require subsequent machining.

Process –

- The liquid wax is injected (150 – 170)0F into the metallic die at pressure (7 – 70) kg/cm2. After cooling the wax mould is removed out of the metallic die. The silicate slurry is prepared in a pot.

- The constituents of silicate slurry are 91.2% sand, 33.8% water, 6.5% calcium phosphate 2.3% magnesium oxide and meshed silica. After the preparation of silicate slurry is over then the wax mould is dipped in the solution of silicate slurry. The wax mould can be dipped for 6 to7 time. Now the wax mould is coated with silicate slurry.

- The silicate moulds are allowed to cool in air. Then the moulds are taken into auto clave machine. In auto clave machine the wax is removed out of the mould by the application of steam. The wax from the silicate mould is collected in wax collector.

The silicate mould is taken into pre-heater for pre-heating. Before pouring the molten metal into the mould the pre-heating is required. Pre-heating is to remove vapours and any wax linings present on inside wall of the mould.

- The metal is melted in a melting pot. After the metal reaches into molten stage, the molten metal is poured into the ladle. From the ladle the molten metal is poured into the silicate mould. Then the casting is allowed to cool and solidify in air.

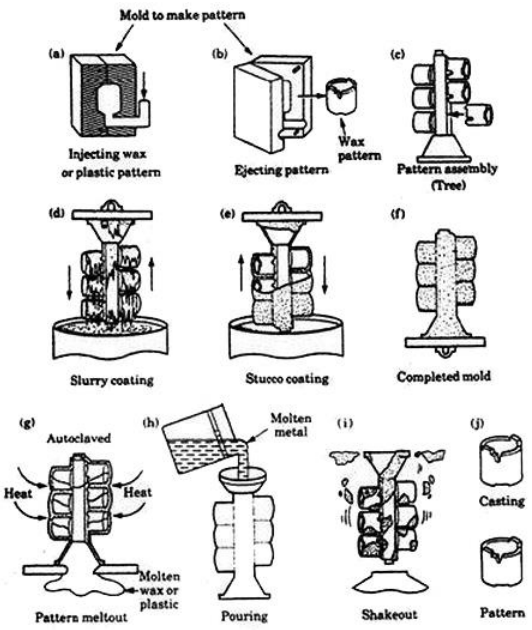

WORKING:-

- This is the process where the mould is prepared around an expandable pattern. The various steps in the process are as follows.

STEP-1

- The first step in this process is the preparation of the pattern for every casting to be made. To do this, molten wax, which is used as the pattern material is injected under pressure of about 2.5 MPa in to a metallic die, which has the cavity of the casting to be made.

STEP-2

- The wax when allowed to solidify would produce the pattern. The pattern is injected from the die.

STEP-3

- Then the cluster of wax pattern are attached to the gating system by applying heat.

Step-4

- To make the mould, the prepared pattern is dipped in to a slurry made by suspending fine ceramic materials in a liquid such as ethyl silicate or sodium silicate.

STEP-5

- The excess liquid is allowed to drain off from the pattern. Dry refractory grain such as fused silica or Zircon are stuccoed on this liquid ceramic coating. Thus, a small shell is formed is around the wax pattern. The shell is cured and then the process of dipping and stuccoing is continued with ceramic slurries of gradually

increasing grain size. Finally, when a shell thickness of 6 to 15 mm is reached, the mould is ready for further processing.

STEP-6

- The next step in the process is to remove pattern from the mould, which is done by heating the mould to melt the pattern. The melted wax is completely drained through the sprue by inverting the mould. Any wax remains in the mould are dissolved with the help of the hot vapor of a solvent, such as trichloro-ethylene.

STEP-7

- The molten metal is poured in to the mould under gravity, under slight pressure, by evacuating the mould first.

ADVANTAGES:-

- The close tolerance (± 0.05) are easily maintained in average work.
- It produces extremely smooth surfaces.
- It eliminates most machining operations including thread cutting and gear tooth forming.
- Very close tolerance and excellence surface finish can be obtained.
- Little or no machining is required.
- Almost any metal can be cast.
- No flash on parting lines.
- Stronger components .
- Strength is higher
- Light stressed wax impression dies have a very long life.

DISADVANTAGES:-

- The investment moulds are as well as the materials from which they are made are single purpose, therefore they can not be reused. This increases cost of production.
- The larger objects are impractical for investment casting due to equipment size limits
- Expensive due to preparation of wax patterns and shell moulds.
- It is a time consuming process.

Applications:-

- - Textile industries
- Automobile industries
- - Food industries
- - Oil gas industries
- - Pump and valve industries.

Inspection of Casting

1. The process of detecting casting defect is known as inspection of casting.
2. There are three types of inspection used for casting parts.
   (a) **Process inspection**:-Inspection done while parts are being processed. This is helpful to detect defects at the start and allow them correction.In process inspections are carried out before a lot of castings have been completed to detect any flaws that may have occurred in the process so that corrective measures can be taken to remove the defect in the remaining units. Finished product inspections are carried out after the castings have all been completed to make sure that the product meets the requirements specified by the customer.

   b) **Visual inspection**:- It is simplest and most fastest inspection method visually or manually. It is usually good to check surface defects but fails to identify internal defects. It consists of inspecting the surface of the casting with naked eye or sometimes with a magnifying glass or microscope. It can only indicate surface defects such as blow holes, fusion, swells, external cracks, and mismatch. Almost all castings are subjected to certain degree of visual inspection

(c) **Dimensional Inspection**:-Before casting parts are to be machined, dimension inspection is done. Casting are placed on surface plate or surface table with angle measuring instrument to measure the accuracy or dimension of parts. Dimensional inspection is carried out to make sure that the castings produced have the required overall dimensions including allowances for machining. It may sometimes be necessary to break a part of the casting to take measurements of inside dimensions.

Testing Methods:-

(i) Pressure testing
(ii) Destructive testing
(iii) Non-Destructive testing

i)Pressure testing:-Casting that is used for containing or conveying liquids, gases such types are subjected to pressure testing. It is tested for any leaks through their walls. Leaks may be detected by sub-merged the complete casting under water for gas pressure or by visual inspection by liquid pressure. This test is carried out on castings required to be leak proof. All openings of the castings are closed and a gas or fluid under pressure is introduced in it. Castings having porosity leak under this pressure. The leakage may be detected by submerging the casting in a water tank or using a

soap film if the pressure is applied by compressed air. If a liquid is used for applying pressure the leakage can be found by visual inspection.

ii)Destructive testing:-This test is done causing harm to the casting i.e. by destroying it. Various destructive test includes compression test, fatigue test, creep test, tensile test etc.

iii)Non-Destructive testing:-Parts to be tested are inspection for internal defects and surface defect without be non-destructive testing are

- Liquid penetration testing,
- Magnetic particle testing,
- X-ray radiography testing,
- Ultrasonic testing.

X-ray radiography: - Radiography uses X-rays or gamma rays penetrating through the castings and giving a shadow picture on a photographic film placed behind the work piece. These rays have very short wave length of the order of 0.001 Angstrom (10^{-10}m) units to 40 Angstrom units for x-rays and 0.005 to about 3 Angstrom units for gamma rays compared to about 5500 Angstrom units for the centre of the visible spectrum.

The ability of these waves to penetrate through metal depends also on the density of the metal and as such they can penetrate more easily in places where there is less metal that those where more metal is present leading to a shadow picture formation on the film. Any defects in the casting can easily be identified from this picture. Because of their shorter wave length gamma rays have a better penetration through the metal and are more commonly used.

Magnetic particle test:- This test is used for detecting cracks in metals like cast iron and steel which can be magnetized. For carrying out the test the casting is magnetized and then fine particles of iron or steel are spread on its surface. Presence of a crack or void in the casting results in interruption of the magnetic field and leakage of magnetic flux at the place of the crack.

The particles of iron or steel spread on the casting surface are held by this leaking flux giving a visual indication of the nature and extent of crack. Very small cracks or voids at or near the surface which may not even be detected by radiography are easily revealed by this method.

Liquid Penetrant Testing:- This method also is used for detecting very small surface cracks and has the advantage over the magnetic particle method that it can be used for any material. The parts to be tested are either dipped into or covered with a penetrant testing liquid which has very good wetting and penetrating ability. The liquid is drawn into the cracks or voids by capillary action.

After the penetrant has been applied to the surface to be tested extra penetrant is wiped off the surface is dried and a developer applied to it. This developer helps in drawing out the penetrant so that it becomes visible on the surface. The penetrant liquids often contain materials which fluoresce under ultraviolet light or a die to indicate their presence.

Ultrasonic Testing:- Ultrasonic testing is used to detect defects like cracks, voids or porosity within the interior of the casting. The method uses reflection and transmission of high frequency sound waves. Ultrasonic sound waves much higher than the audible range are produced and made to pass through the casting.

The time interval between the transmitted ray and reflected ray is recorded by a cathode ray oscilloscope. Any crack or void in the casting results in reflection or some of the sound from the crack which appears as a pip between the two pips representing the thickness of the casting. The depth of the crack from the surface of the casting can be easily calculated from the distance between these pips.

<u>Economics of Casting</u> :-

- The cost of the cast part (unit cost) depends on several factors: including materials, tooling, equipment, and labor.
- Preparations for casting a product include the production of molds and dies that require raw materials, time, and effort – all of which also influence product cost.
- There are also major costs involved in making patterns for casting.
- Costs also are involved in melting and pouring the molten metal into molds and in heat treating, cleaning, and inspecting the casting.
- Heat treatment in an important part of the production of many alloys groups (especially ferrous castings) and may be necessary to produce improved mechanical properties.
- The equipment cost per casting will decrease as the number of parts cast increase. Sustained high production rates, therefore, can justify the high cost of dies and machinery.

- However, if the demand is relatively small, the cost-per-casting increases rapidly. It then becomes more economical to manufacture the parts by sand casting.